Sales Code: BAYFH81DWHG1B

Barcode: 5056817740474

Brand: Bayswater

Description: Bayswater Hartleigh 800mm Hunter Green 1 Drawer Wall Hung Cabinet With 1 Tap Hole Fireclay Basin



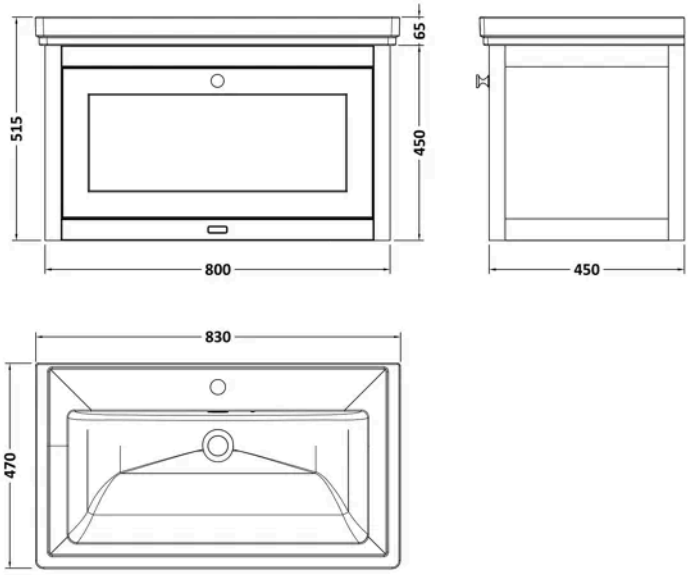

Product Dimensions

Product	865 x 830 x 470mm (H x W x D)
Packaged	960 x 1370 x 630mm (H x W x D)
Nett Weight	44 kg
Packaged Weight	44 kg

Product Details

Country of Origin	Ukraine
Product Material	Fireclay,Mfc Painted Matt
Colour/Finish	Hunter Green
Mount Type	Wall Hung
Style	Traditional
Handle Type	Knob
Construction Method	Cam & Wood Dowel
Construction Type	Rigid
Drawer Type	80mm High Metal S/C Inc Gallery
Fascia Finish	Mdf Painted Matt
Handles Included	Yes
Inner Bowl Depth	295 mm
Inner Bowl Height	134 mm
Inner Bowl Width	680 mm
Material Thickness	18 mm
No. Drawers	1
No. Of Tapholes	1
Number Of Bowls	1
Overflow Cover Included	Yes
Overflow Included	Yes
Tap Included	No
Waste Included	No
Waste Shroud	Yes

© ROXOR Group

Sales Code: BAYC505 **Barcode:** 5056678499962 **Brand:** Bayswater **Description:** Bayswater 1 Tap Hole 800mm Traditional Fireclay Basin



Technical Drawing Not Available

Product Dimensions

Product	186 x 830 x 470mm (H x W x D)
Packaged	490 x 850 x 220mm (H x W x D)
Nett Weight	21.5 kg
Packaged Weight	21.5 kg

Packaging Details

Label Size (mm)	50 x 100
Label Colour	White
Label Qty	2.0000

Product Details

Country of Origin	United Arab Emirates
Product Material	Fireclay
Colour/Finish	White
Style	Traditional
Bottle Trap Included	No
Ce Certified	Yes
Inner Bowl Depth	295 mm
Inner Bowl Height	134 mm
Inner Bowl Width	680 mm
No. Of Tapholes	1
Number Of Bowls	1
Overflow Cover Included	No
Overflow Included	Yes
Tap Included	No
Waste Included	No

© ROXOR Group

Sales Code: BAYF824H **Barcode:** 5056817727475 **Brand:** Bayswater **Description:** Bayswater Hartleigh 800mm Hunter Green 1 Drawer Wall Hung Vanity Unit



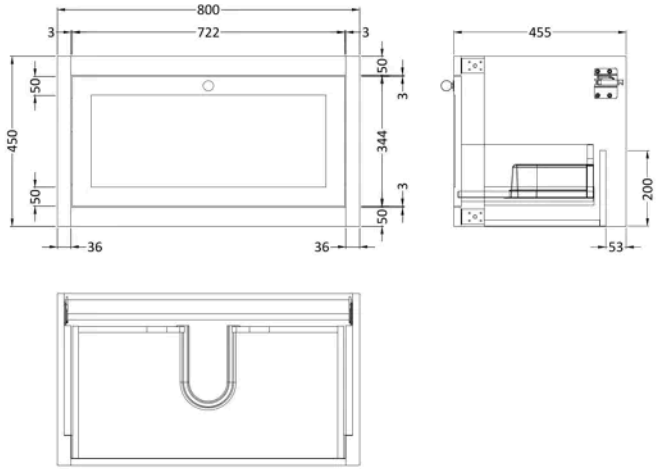

Product Dimensions

Product	450 x 800 x 450mm (H x W x D)
Packaged	490 x 855 x 490mm (H x W x D)
Nett Weight	22 kg
Packaged Weight	22.5 kg

Product Details

Country of Origin	Ukraine
Product Material	Mfc Painted Matt
Colour/Finish	Hunter Green
Mount Type	Wall Hung
Style	Traditional
Handle Type	Knob
Construction Method	Cam & Wood Dowel
Construction Type	Rigid
Drawer Type	80mm High Metal S/C Inc Gallery
Fascia Finish	Mdf Painted Matt
Handles Included	Yes
Material Thickness	18 mm
No. Drawers	1
Waste Shroud	Yes

© ROXOR Group