Sales Code: BAYFH81DSB1CT

Barcode: 5056817742836

Brand: Bayswater

Description: Bayswater Hartleigh 800mm Stiffkey Blue 1 Drawer Floor Standing Cabinet With 1 Tap Hole Marble Worktop



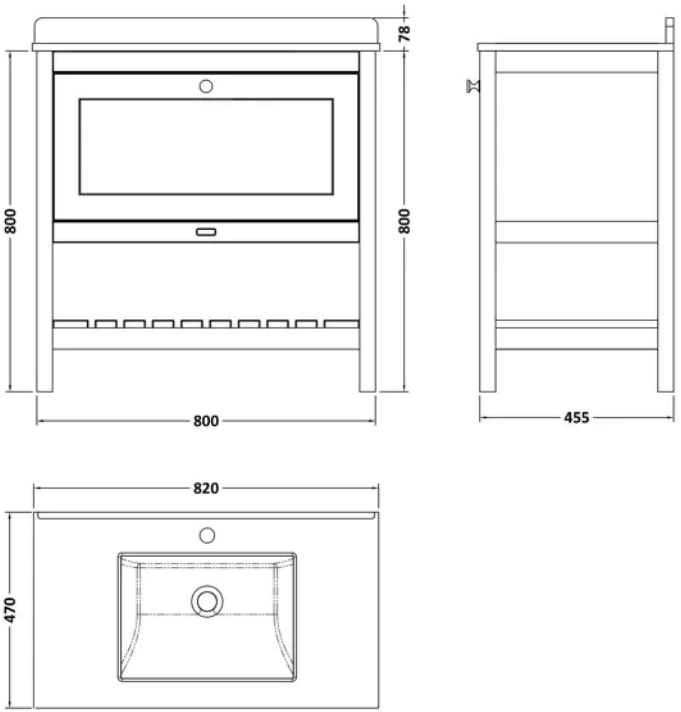

Product Dimensions

Product	878 x 820 x 470mm (H x W x D)
Packaged	1130 x 1420 x 960mm (H x W x D)
Nett Weight	54.2 kg
Packaged Weight	54.2 kg

Product Details

Country of Origin	Ukraine
Product Material	Mfc Painted Matt,Natural Marble,Vitreous China
Colour/Finish	Stiffkey Blue
Mount Type	Floor
Style	Traditional
Handle Type	Knob
Construction Method	Cam & Wood Dowel
Construction Type	Rigid
Drawer Type	80mm High Metal S/C Inc Gallery
Fascia Finish	Mdf Painted Matt
Handles Included	Yes
Inner Bowl Depth	272 mm
Inner Bowl Height	160 mm
Inner Bowl Width	358 mm
Material Thickness	18 mm
No. Drawers	1
No. Of Tapholes	1
No. Shelves	1
Number Of Bowls	1
Number Of Shelves	1
Overflow Cover Included	Yes
Overflow Included	Yes
Tap Included	No
Waste Included	No
Waste Shroud	Yes

© ROXOR Group

Sales Code: BAYC258 **Barcode:** 5056678499399 **Brand:** Bayswater **Description:** Bayswater 800mm 1 Tap Hole Single Bowl White Marble Top Basin



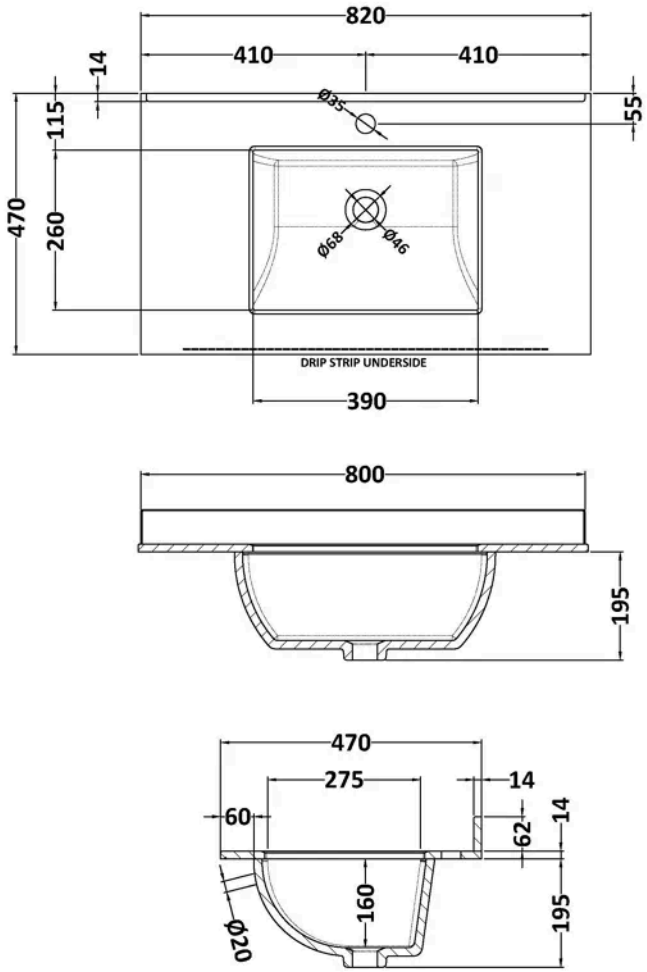

Product Dimensions

Product	209 x 820 x 463mm (H x W x D)
Packaged	250 x 900 x 580mm (H x W x D)
Nett Weight	20.5 kg
Packaged Weight	21 kg

Packaging Details

Box Qty	1
Label Size (mm)	50 x 100
Label Colour	White
Label Qty	2.0000

Product Details

Country of Origin	China
Product Material	Vitreous China
Colour/Finish	White
Style	Traditional
Bottle Trap Included	No
Ce Certified	Yes
Inner Bowl Depth	275 mm
Inner Bowl Height	160 mm
Inner Bowl Width	390 mm
No. Of Tapholes	1
Number Of Bowls	1
Overflow Cover Included	No
Overflow Included	Yes
Tap Included	No
Waste Included	No

© ROXOR Group

Sales Code: BAYF304H **Barcode:** 5056817727338 **Brand:** Bayswater **Description:** Bayswater Hartleigh 500mm Stiffkey Blue Floor Standing 1 Drawer Vanity Unit



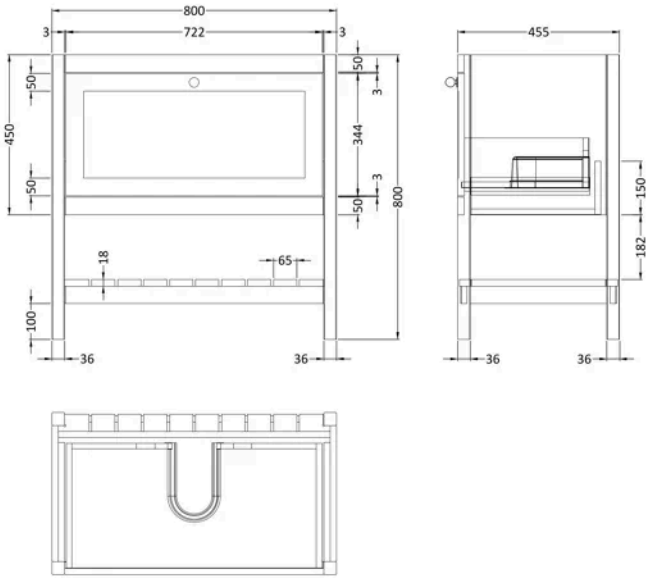

Product Dimensions

Product	800 x 800 x 450mm (H x W x D)
Packaged	855 x 855 x 490mm (H x W x D)
Nett Weight	32.7 kg
Packaged Weight	33.2 kg

Product Details

Country of Origin	Ukraine
Product Material	Mfc Painted Matt
Colour/Finish	Stiffkey Blue
Mount Type	Floor
Style	Traditional
Handle Type	Knob
Construction Method	Cam & Wood Dowel
Construction Type	Rigid
Drawer Type	80mm High Metal S/C Inc Gallery
Fascia Finish	Mdf Painted Matt
Handles Included	Yes
Material Thickness	18 mm
No. Drawers	1
Waste Shroud	Yes

© ROXOR Group