**Sales Code:** BAYFH61DWPW1BC

**Barcode:** 5056817744861

**Brand:** Bayswater

**Description:** Bayswater Hartleigh 600mm Pointing White 1 Drawer Wall Hung Cabinet With 1 Tap Hole Fireclay Basin



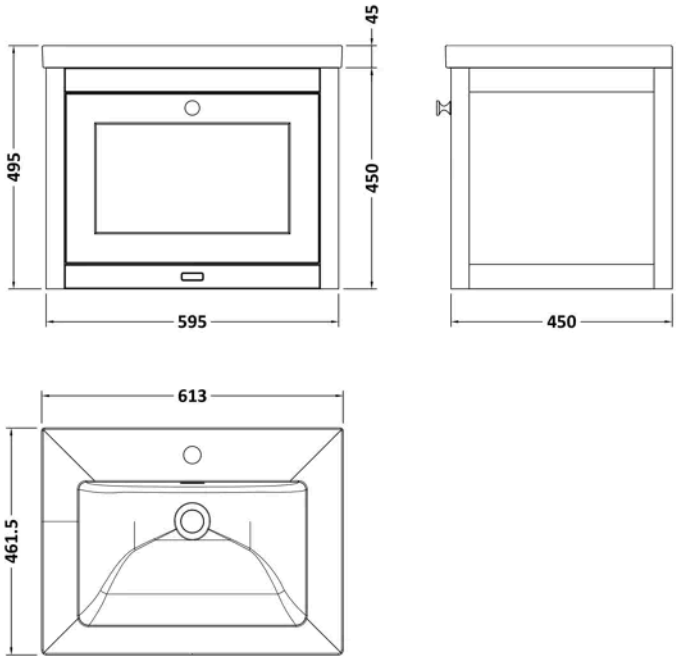


## Product Dimensions

| | |
|---|---|
| Product | 495 x 613 x 462mm (H x W x D) |
| Packaged | 960 x 1170 x 630mm (H x W x D) |
| Nett Weight | 34.5 kg |
| Packaged Weight | 34.5 kg |

## Product Details

| | |
|---|---|
| Country of Origin | Ukraine |
| Product Material | Fireclay,Mfc Painted Matt |
| Colour/Finish | Pointing White |
| Mount Type | Wall Hung |
| Style | Traditional |
| Handle Type | Knob |
| Construction Method | Cam & Wood Dowel |
| Construction Type | Rigid |
| Drawer Type | 80mm High Metal S/C Inc Gallery |
| Fascia Finish | Mdf Painted Matt |
| Handles Included | Yes |
| Inner Bowl Depth | 300 mm |
| Inner Bowl Height | 135 mm |
| Inner Bowl Width | 480 mm |
| Material Thickness | 18 mm |
| No. Drawers | 1 |
| No. Of Tapholes | 1 |
| No. Shelves | 1 |
| Number Of Bowls | 1 |
| Number Of Shelves | 1 |
| Overflow Cover Included | Yes |
| Overflow Included | Yes |
| Tap Included | No |
| Waste Included | No |
| Waste Shroud | Yes |

© ROXOR Group

**Sales Code:** BAYC603 **Barcode:** 5056817727529 **Brand:** Bayswater **Description:** Bayswater 600mm 1 Tap Hole Modern Fireclay Basin



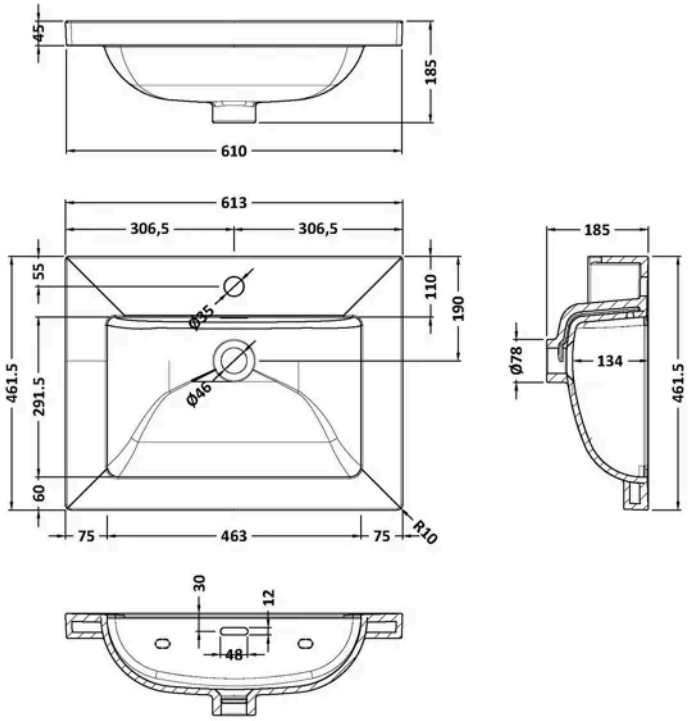


## Product Dimensions

| | |
|---|---|
| Product | 185 x 613 x 292mm (H x W x D) |
| Packaged | 490 x 650 x 220mm (H x W x D) |
| Nett Weight | 17 kg |
| Packaged Weight | 17 kg |

## Packaging Details

| | |
|---|---|
| Label Size (mm) | 100 x 50 |
| Label Colour | White |
| Label Qty | 2.0000 |

## Product Details

| | |
|---|---|
| Country of Origin | United Arab Emirates |
| Product Material | Fireclay |
| Colour/Finish | White |
| Style | Traditional |
| Bottle Trap Included | No |
| Ce Certified | Yes |
| Inner Bowl Depth | 300 mm |
| Inner Bowl Height | 135 mm |
| Inner Bowl Width | 463 mm |
| No. Of Tapholes | 1 |
| Number Of Bowls | 1 |
| Overflow Cover Included | No |
| Overflow Included | No |
| Tap Included | No |
| Waste Included | No |

© ROXOR Group

**Sales Code:** BAYF121H **Barcode:** 5056817727468 **Brand:** Bayswater **Description:** Bayswater Hartleigh 600mm Pointing White 1 Drawer Wall Hung Vanity Unit



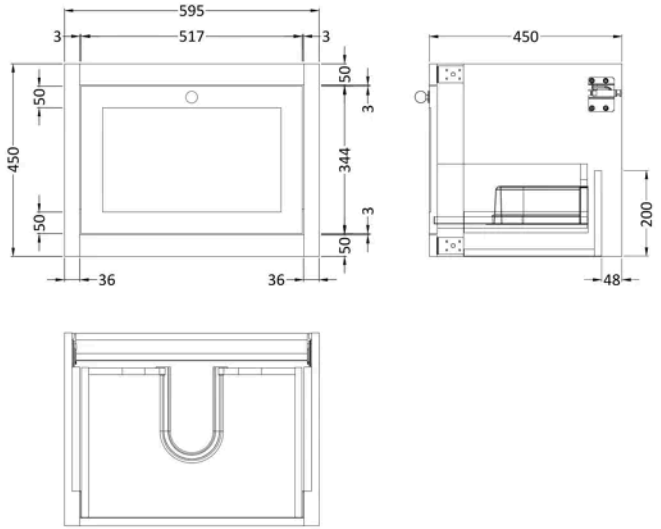


## Product Dimensions

| | |
|---|---|
| Product | 450 x 600 x 450mm (H x W x D) |
| Packaged | 470 x 520 x 410mm (H x W x D) |
| Nett Weight | 17 kg |
| Packaged Weight | 17.5 kg |

## Product Details

| | |
|---|---|
| Country of Origin | Ukraine |
| Product Material | Mfc Painted Matt |
| Colour/Finish | Pointing White |
| Mount Type | Wall Hung |
| Style | Traditional |
| Handle Type | Knob |
| Construction Method | Cam & Wood Dowel |
| Construction Type | Rigid |
| Drawer Type | 80mm High Metal S/C Inc Gallery |
| Fascia Finish | Mdf Painted Matt |
| Handles Included | Yes |
| Material Thickness | 18 mm |
| No. Drawers | 1 |
| Waste Shroud | Yes |

© ROXOR Group