Sales Code: BAYFH61DSB1BC

Barcode: 5056817744694

Brand: Bayswater

Description: Bayswater Hartleigh 600mm Stiffkey Blue 1 Drawer Floor Standing Cabinet With 1 Tap Hole Fireclay Basin



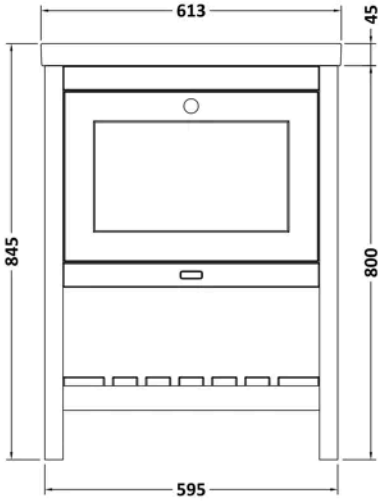

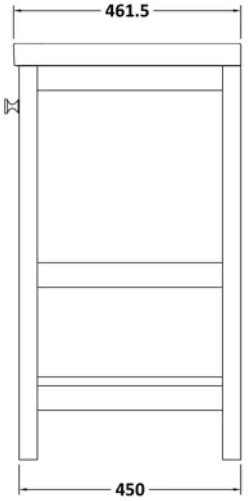

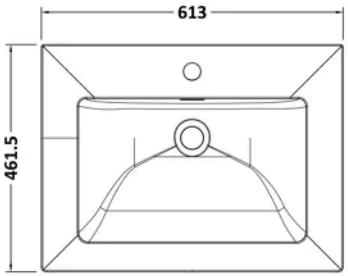

Product Dimensions

Product	845 x 613 x 462mm (H x W x D)
Packaged	1310 x 1170 x 630mm (H x W x D)
Nett Weight	43.2 kg
Packaged Weight	43.2 kg

Product Details

Country of Origin	Ukraine
Product Material	Fireclay,Mfc Painted Matt
Colour/Finish	Stiffkey Blue
Mount Type	Floor
Style	Traditional
Handle Type	Knob
Construction Method	Cam & Wood Dowel
Construction Type	Rigid
Drawer Type	80mm High Metal S/C Inc Gallery
Fascia Finish	Mdf Painted Matt
Handles Included	Yes
Inner Bowl Depth	300 mm
Inner Bowl Height	135 mm
Inner Bowl Width	480 mm
Material Thickness	18 mm
No. Drawers	1
No. Of Tapholes	1
No. Shelves	1
Number Of Bowls	1
Number Of Shelves	1
Overflow Cover Included	Yes
Overflow Included	Yes
Tap Included	No
Waste Included	No
Waste Shroud	Yes

© ROXOR Group

Sales Code: BAYC603 **Barcode:** 5056817727529 **Brand:** Bayswater **Description:** Bayswater 600mm 1 Tap Hole Modern Fireclay Basin



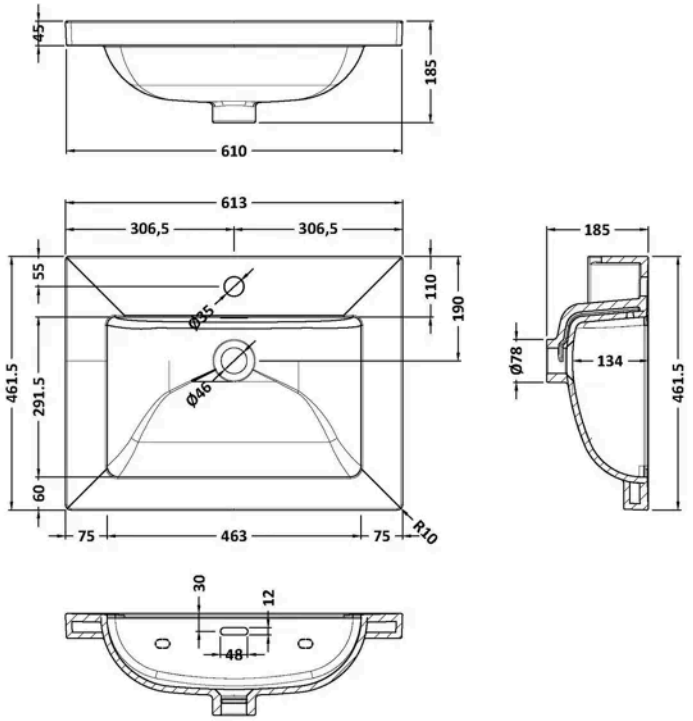

Product Dimensions

Product	185 x 613 x 292mm (H x W x D)
Packaged	490 x 650 x 220mm (H x W x D)
Nett Weight	17 kg
Packaged Weight	17 kg

Packaging Details

Label Size (mm)	100 x 50
Label Colour	White
Label Qty	2.0000

Product Details

Country of Origin	United Arab Emirates
Product Material	Fireclay
Colour/Finish	White
Style	Traditional
Bottle Trap Included	No
Ce Certified	Yes
Inner Bowl Depth	300 mm
Inner Bowl Height	135 mm
Inner Bowl Width	463 mm
No. Of Tapholes	1
Number Of Bowls	1
Overflow Cover Included	No
Overflow Included	No
Tap Included	No
Waste Included	No

© ROXOR Group

Sales Code: BAYF301H **Barcode:** 5056817727284 **Brand:** Bayswater **Description:** Bayswater Hartleigh 500mm Stiffkey Blue Floor Standing 1 Drawer Vanity Unit



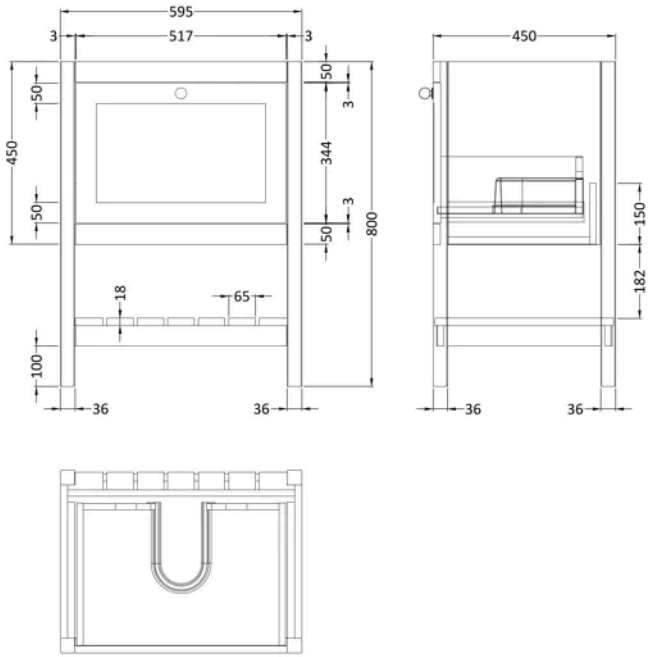

Product Dimensions

Product	800 x 600 x 450mm (H x W x D)
Packaged	855 x 650 x 490mm (H x W x D)
Nett Weight	25.7 kg
Packaged Weight	26.2 kg

Product Details

Country of Origin	Ukraine
Product Material	Mfc Painted Matt
Colour/Finish	Stiffkey Blue
Mount Type	Floor
Style	Traditional
Handle Type	Knob
Construction Method	Cam & Wood Dowel
Construction Type	Rigid
Drawer Type	80mm High Metal S/C Inc Gallery
Fascia Finish	Mdf Painted Matt
Handles Included	Yes
Material Thickness	18 mm
No. Drawers	1
Waste Shroud	Yes

© ROXOR Group