Sales Code: BAYFH61DCB1CT

Barcode: 5056817742645

Brand: Bayswater

Description: Bayswater Hartleigh 600mm Matt Black 1 Drawer Floor Standing Cabinet With 1 Tap Hole Marble Worktop



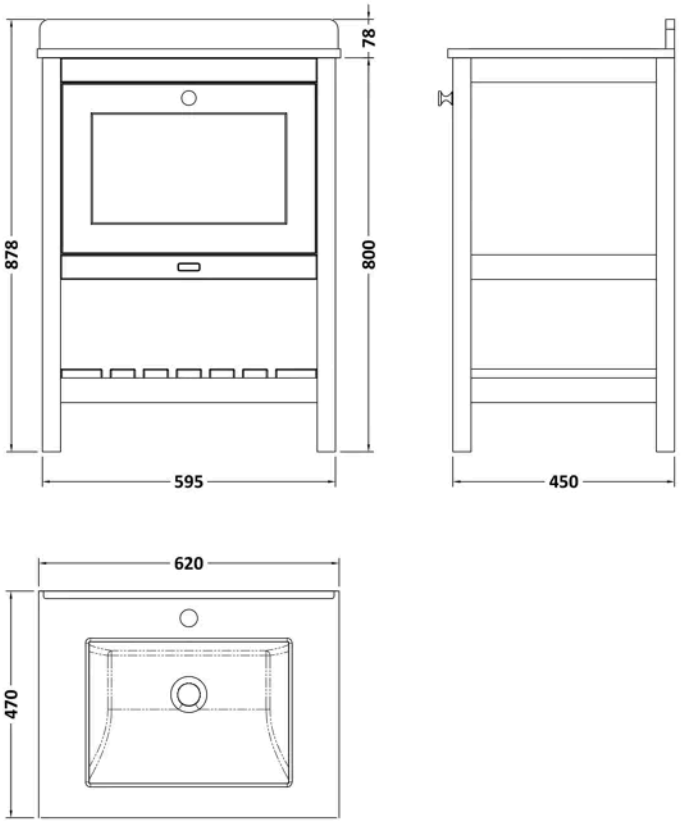

Product Dimensions

Product	878 x 620 x 470mm (H x W x D)
Packaged	1310 x 1170 x 630mm (H x W x D)
Nett Weight	43.2 kg
Packaged Weight	43.2 kg

Product Details

Country of Origin	Ukraine
Product Material	Mfc Painted Matt,Natural Marble,Vitreous China
Colour/Finish	Matt Black
Mount Type	Floor
Style	Traditional
Handle Type	Knob
Construction Method	Cam & Wood Dowel
Construction Type	Rigid
Drawer Type	80mm High Metal S/C Inc Gallery
Fascia Finish	Mdf Painted Matt
Handles Included	Yes
Inner Bowl Depth	272 mm
Inner Bowl Height	160 mm
Inner Bowl Width	358 mm
Material Thickness	18 mm
No. Drawers	1
No. Of Tapholes	1
No. Shelves	1
Number Of Bowls	1
Number Of Shelves	1
Overflow Cover Included	Yes
Overflow Included	Yes
Tap Included	No
Waste Included	No
Waste Shroud	Yes

© ROXOR Group

Sales Code: BAYC257 **Barcode:** 5056678499931 **Brand:** Bayswater **Description:** Bayswater 600mm 1 Tap Hole Single Bowl White Marble Top Basin



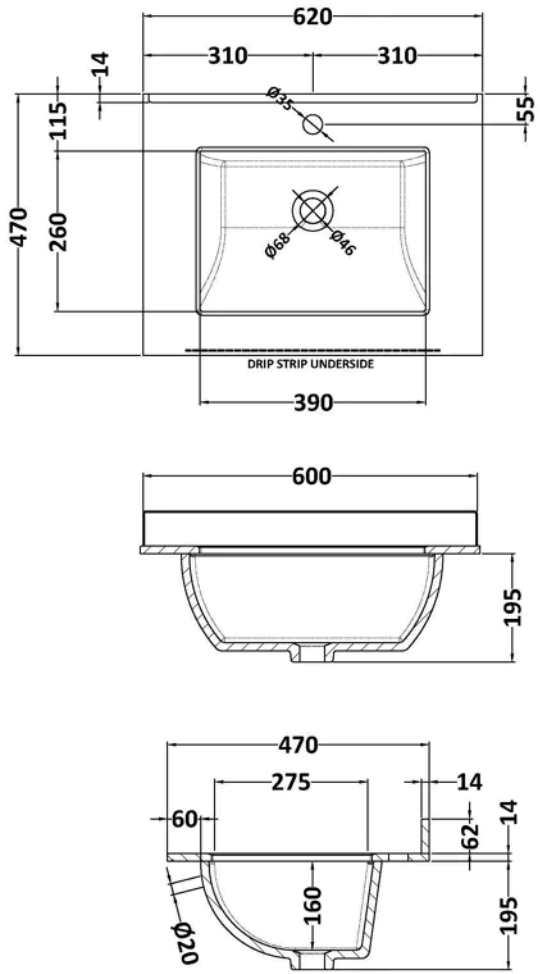

Product Dimensions

Product	195 x 620 x 470mm (H x W x D)
Packaged	250 x 700 x 580mm (H x W x D)
Nett Weight	16.5 kg
Packaged Weight	17 kg

Packaging Details

Label Size (mm)	50 x 100
Label Colour	White
Label Qty	2.0000

Product Details

Country of Origin	China
Product Material	Vitreous China
Colour/Finish	White
Style	Traditional
Bottle Trap Included	No
Inner Bowl Depth	260 mm
Inner Bowl Height	160 mm
Inner Bowl Width	390 mm
No. Of Tapholes	1
Number Of Bowls	1
Overflow Cover Included	No
Overflow Included	Yes
Tap Included	No
Waste Included	No

© ROXOR Group

Sales Code: BAYF401H **Barcode:** 5056817727291 **Brand:** Bayswater **Description:** Bayswater Hartleigh 500mm Matt Black 1 Drawer Floor Standing Vanity Unit



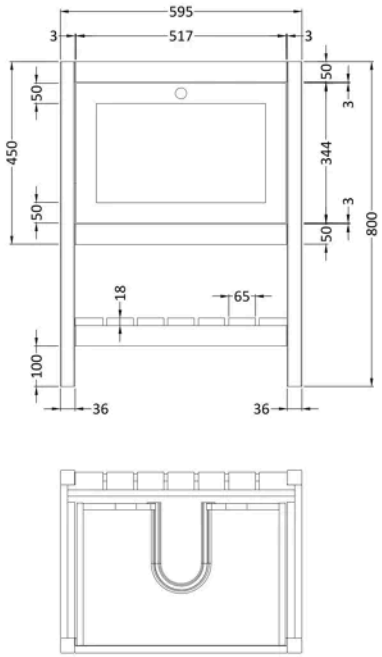

Product Dimensions

Product	800 x 600 x 450mm (H x W x D)
Packaged	855 x 650 x 490mm (H x W x D)
Nett Weight	25.7 kg
Packaged Weight	26.2 kg

Product Details

Country of Origin	Ukraine
Product Material	Mfc Painted Matt
Colour/Finish	Matt Black
Mount Type	Floor
Style	Traditional
Handle Type	Knob
Construction Method	Cam & Wood Dowel
Construction Type	Rigid
Drawer Type	80mm High Metal S/C Inc Gallery
Fascia Finish	Mdf Painted Matt
Handles Included	Yes
Material Thickness	18 mm
No. Drawers	1
Waste Shroud	Yes

© ROXOR Group