**Sales Code:** BAYFH51DWPG3B

**Barcode:** 5056817742928

**Brand:** Bayswater

**Description:** Bayswater Hartleigh 500mm Plummett Grey 1 Drawer Wall Hung Cabinet With 3 Tap Hole Fireclay Basin



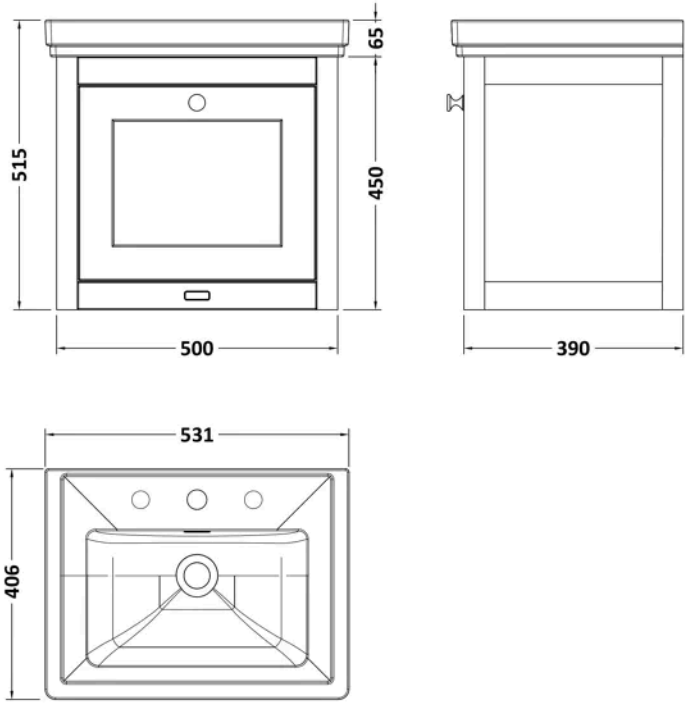


## Product Dimensions

| | |
|---|---|
| Product | 515 x 531 x 406mm (H x W x D) |
| Packaged | 900 x 1070 x 630mm (H x W x D) |
| Nett Weight | 29.6 kg |
| Packaged Weight | 29.6 kg |

## Product Details

| | |
|---|---|
| Country of Origin | Ukraine |
| Product Material | Fireclay,Mfc Painted Matt |
| Colour/Finish | Plummett Grey |
| Mount Type | Wall Hung |
| Style | Traditional |
| Handle Type | Knob |
| Construction Method | Cam & Wood Dowel |
| Construction Type | Rigid |
| Drawer Type | 80mm High Metal S/C Inc Gallery |
| Fascia Finish | Mdf Painted Matt |
| Handles Included | Yes |
| Inner Bowl Depth | 234 mm |
| Inner Bowl Height | 136 mm |
| Inner Bowl Width | 381 mm |
| Material Thickness | 18 mm |
| No. Drawers | 1 |
| No. Of Tapholes | 3 |
| No. Shelves | 1 |
| Number Of Bowls | 1 |
| Number Of Shelves | 1 |
| Overflow Cover Included | Yes |
| Overflow Included | Yes |
| Tap Included | No |
| Waste Included | No |
| Waste Shroud | Yes |

© ROXOR Group

**Sales Code:** BAYC532 **Barcode:** 5056817727581 **Brand:** Bayswater **Description:** Bayswater 3 Tap Hole 500mm Traditional Fireclay Basin



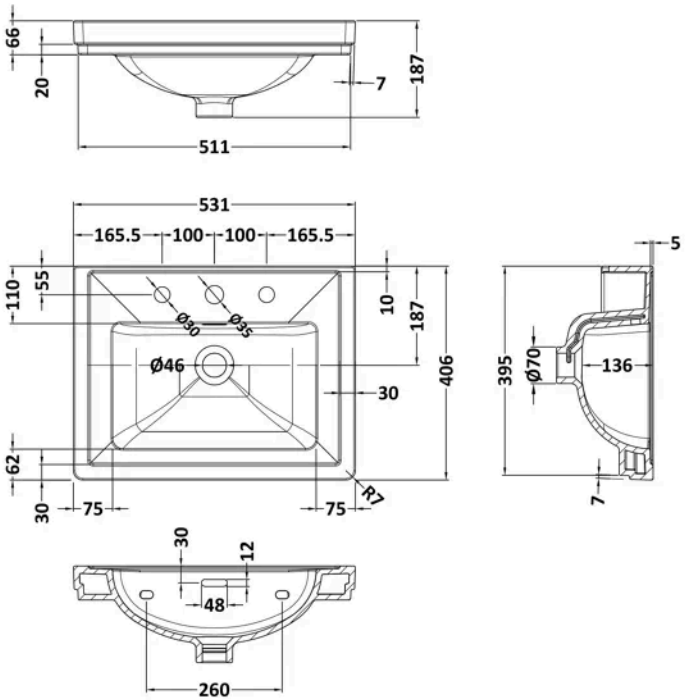


## Product Dimensions

| | |
|---|---|
| Product | 187 x 531 x 406mm (H x W x D) |
| Packaged | 430 x 550 x 220mm (H x W x D) |
| Nett Weight | 13.5 kg |
| Packaged Weight | 13.5 kg |

## Packaging Details

| | |
|---|---|
| Label Colour | White |

## Product Details

| | |
|---|---|
| Country of Origin | United Arab Emirates |
| Product Material | Fireclay |
| Colour/Finish | White |
| Style | Traditional |
| Bottle Trap Included | No |
| Ce Certified | Yes |
| Inner Bowl Depth | 0 mm |
| Inner Bowl Height | 136 mm |
| Inner Bowl Width | 0 mm |
| No. Of Tapholes | 3 |
| Number Of Bowls | 1 |
| Overflow Cover Included | No |
| Overflow Included | No |
| Tap Included | No |
| Waste Included | No |

© ROXOR Group

**Sales Code:** BAYF220H **Barcode:** 5056817727383 **Brand:** Bayswater **Description:** Bayswater Hartleigh 500mm Plummett Grey 1 Drawer Wall Hung Vanity Unit



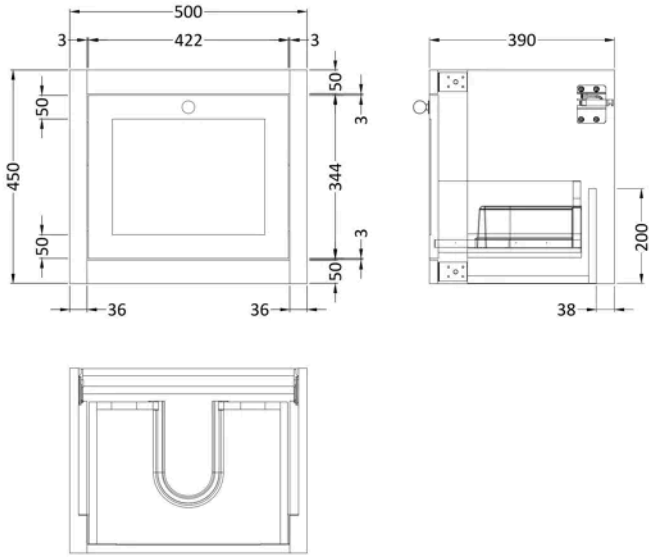


## Product Dimensions

| | |
|---|---|
| Product | 450 x 500 x 390mm (H x W x D) |
| Packaged | 490 x 555 x 490mm (H x W x D) |
| Nett Weight | 15.6 kg |
| Packaged Weight | 16.1 kg |

## Product Details

| | |
|---|---|
| Country of Origin | Ukraine |
| Product Material | Mfc Painted Matt |
| Colour/Finish | Plummett Grey |
| Mount Type | Wall Hung |
| Style | Traditional |
| Handle Type | Knob |
| Construction Method | Cam & Wood Dowel |
| Construction Type | Rigid |
| Drawer Type | 80mm High Metal S/C Inc Gallery |
| Fascia Finish | Mdf Painted Matt |
| Handles Included | Yes |
| Material Thickness | 18 mm |
| No. Drawers | 1 |
| Waste Shroud | Yes |

© ROXOR Group