Sales Code: BAYFH51DPW3B

Barcode: 5056817742454

Brand: Bayswater

Description: Bayswater Hartleigh 500mm Pointing White 1 Drawer Floor Standing Cabinet With 3 Tap Hole Fireclay Basin



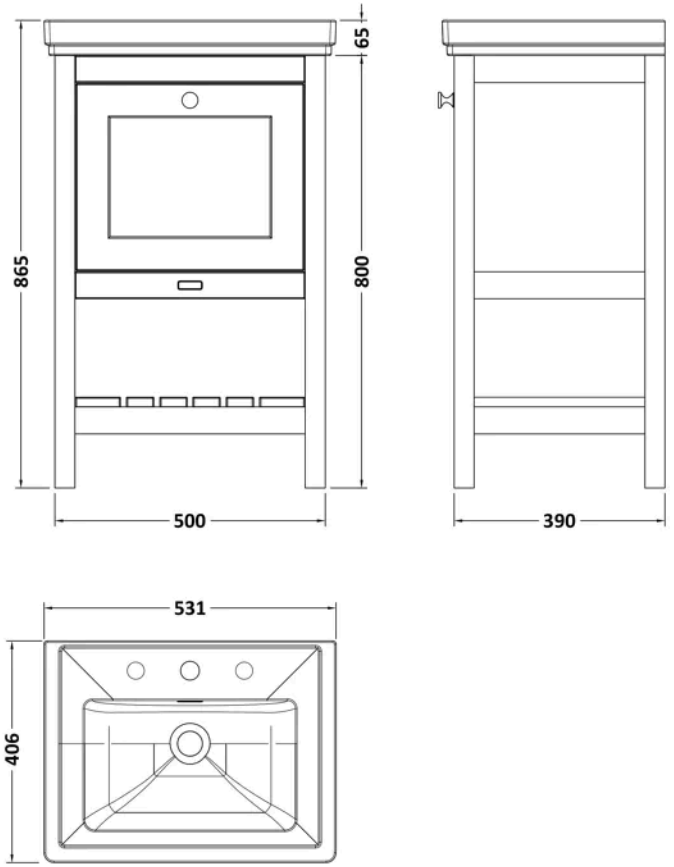

Product Dimensions

Product	865 x 531 x 406mm (H x W x D)
Packaged	1250 x 1070 x 630mm (H x W x D)
Nett Weight	31.5 kg
Packaged Weight	31.5 kg

Product Details

Country of Origin	Ukraine
Product Material	Fireclay,Mfc Painted Matt
Colour/Finish	Pointing White
Mount Type	Floor
Style	Traditional
Handle Type	Knob
Construction Method	Cam & Wood Dowel
Construction Type	Rigid
Drawer Type	80mm High Metal S/C Inc Gallery
Fascia Finish	Mdf Painted Matt
Handles Included	Yes
Inner Bowl Depth	234 mm
Inner Bowl Height	136 mm
Inner Bowl Width	381 mm
Material Thickness	18 mm
No. Drawers	1
No. Of Tapholes	3
No. Shelves	1
Number Of Bowls	1
Number Of Shelves	1
Overflow Cover Included	Yes
Overflow Included	Yes
Tap Included	No
Waste Included	No
Waste Shroud	Yes

© ROXOR Group

Sales Code: BAYC532 **Barcode:** 5056817727581 **Brand:** Bayswater **Description:** Bayswater 3 Tap Hole 500mm Traditional Fireclay Basin



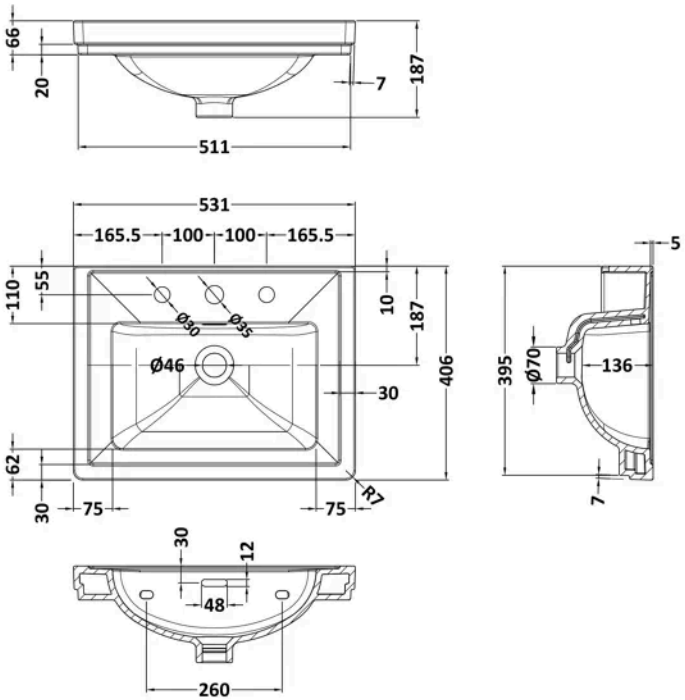

Product Dimensions

Product	187 x 531 x 406mm (H x W x D)
Packaged	430 x 550 x 220mm (H x W x D)
Nett Weight	13.5 kg
Packaged Weight	13.5 kg

Packaging Details

Label Colour	White

Product Details

Country of Origin	United Arab Emirates
Product Material	Fireclay
Colour/Finish	White
Style	Traditional
Bottle Trap Included	No
Ce Certified	Yes
Inner Bowl Depth	0 mm
Inner Bowl Height	136 mm
Inner Bowl Width	0 mm
No. Of Tapholes	3
Number Of Bowls	1
Overflow Cover Included	No
Overflow Included	No
Tap Included	No
Waste Included	No

© ROXOR Group

Sales Code: BAYF100H **Barcode:** 5056817727253 **Brand:** Bayswater **Description:** Bayswater Hartleigh 500mm Pointing White Floor Standing 1 Drawer Vanity Unit



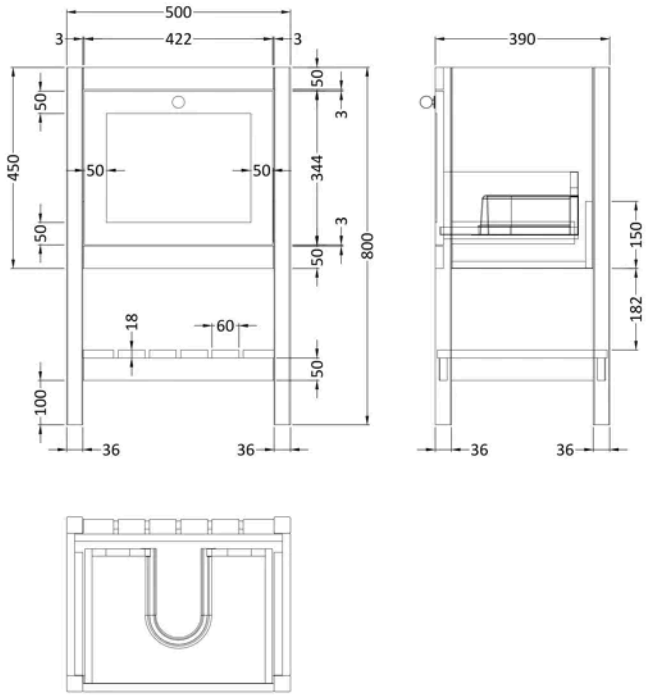

Product Dimensions

Product	800 x 500 x 390mm (H x W x D)
Packaged	820 x 520 x 410mm (H x W x D)
Nett Weight	17.5 kg
Packaged Weight	18 kg

Product Details

Country of Origin	Ukraine
Product Material	Mfc Painted Matt
Colour/Finish	Pointing White
Mount Type	Floor
Style	Traditional
Handle Type	Knob
Construction Method	Cam & Wood Dowel
Construction Type	Rigid
Drawer Type	80mm High Metal S/C Inc Gallery
Fascia Finish	Mdf Painted Matt
Handles Included	Yes
Material Thickness	18 mm
No. Drawers	1
Waste Shroud	Yes

© ROXOR Group