Sales Code: BAYFCOSB1B

Barcode: 5056817742324

Brand: Bayswater

Description: Bayswater 593mm Stiffkey Blue 1 Door Floor Standing Corner Cabinet With 1 Tap Hole Basin



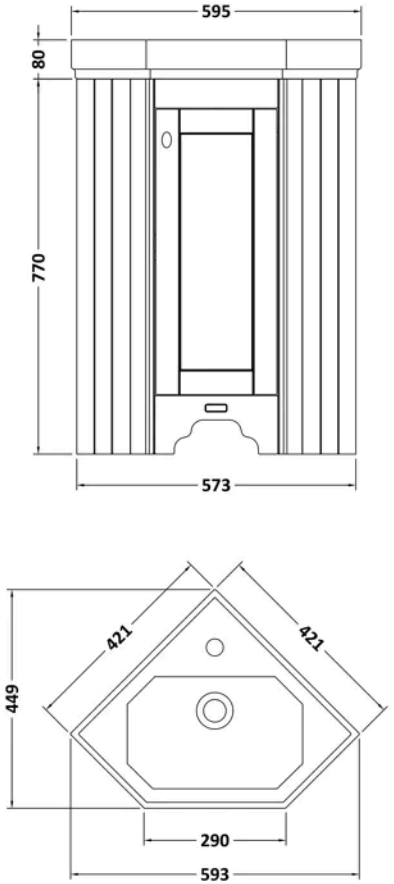

Product Dimensions

Product	850 x 593 x 449mm (H x W x D)
Packaged	1010 x 836 x 876mm (H x W x D)
Nett Weight	27.2 kg
Packaged Weight	27.2 kg

Product Details

Country of Origin	Ukraine
Product Material	Mfc Painted Matt,Vitreous China
Colour/Finish	Stiffkey Blue
Mount Type	Floor
Style	Traditional
Handle Type	Knob
Construction Method	Cam & Wood Dowel
Construction Type	Rigid
Fascia Finish	Mdf Painted Matt
Handles Included	Yes
Inner Bowl Depth	225 mm
Inner Bowl Height	140 mm
Inner Bowl Width	360 mm
Material Thickness	16 mm
No. Doors	1
No. Of Tapholes	1
No. Shelves	1
Number Of Bowls	1
Number Of Shelves	1
Overflow Cover Included	Yes
Overflow Included	Yes
Tap Included	No
Waste Included	No
Waste Shroud	No

© ROXOR Group

Sales Code: BAYC013 **Barcode:** 5055275892251 **Brand:** Bayswater **Description:** Bayswater Fitzroy 1 Tap Hole Ceramic Corner Basin



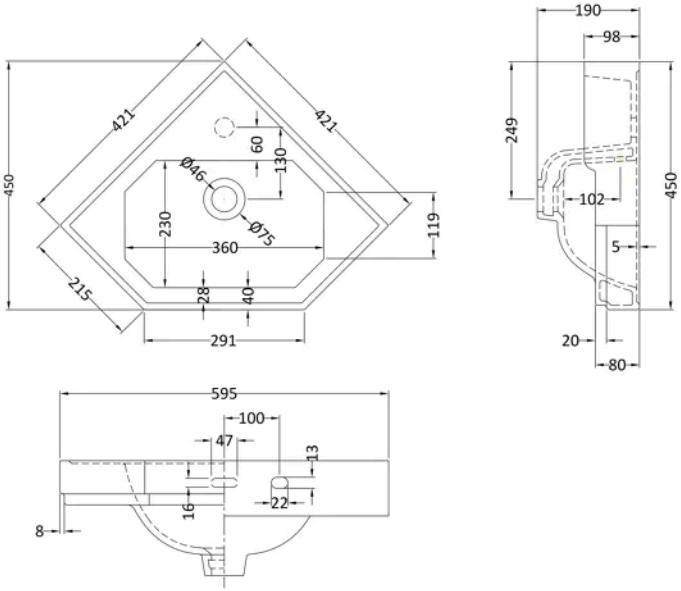

Product Dimensions

Product	185 x 593 x 450mm (H x W x D)
Packaged	210 x 400 x 440mm (H x W x D)
Nett Weight	9 kg
Packaged Weight	9.5 kg

Product Details

Country of Origin	China
Product Material	Vitreous China
Colour/Finish	White
Style	Traditional
Ce Certified	Yes
Inner Bowl Height	140 mm
No. Of Tapholes	1
Number Of Bowls	1
Overflow Cover Included	No
Overflow Included	Yes
Tap Included	No
Waste Included	No

© ROXOR Group

Sales Code: BAYF176 **Barcode:** 5056211868958 **Brand:** Bayswater **Description:** Bayswater 573mm Stiffkey Blue 1 Door Floor Standing Corner Vanity Unit



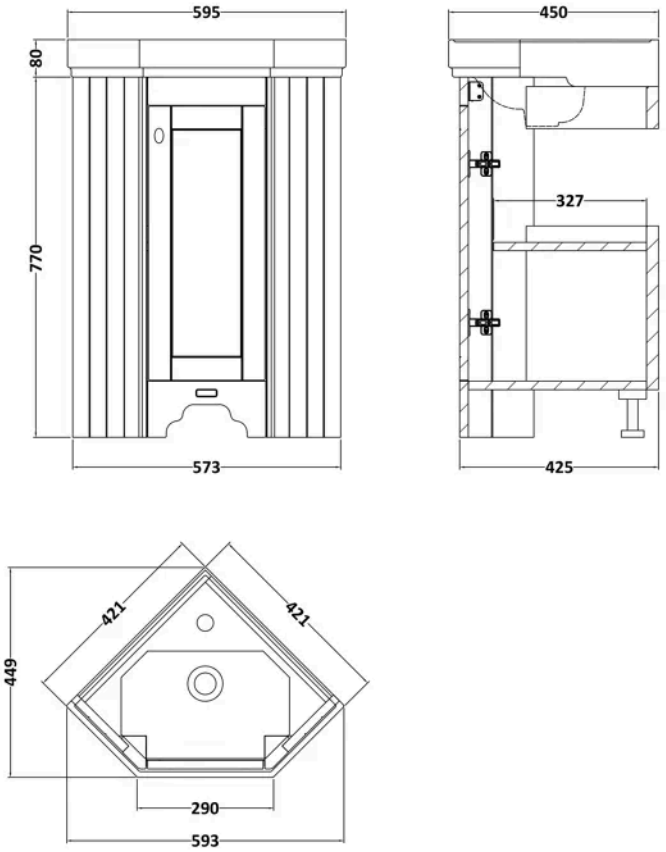

Product Dimensions

Product	770 x 573 x 425mm (H x W x D)
Packaged	800 x 435 x 435mm (H x W x D)
Nett Weight	17.2 kg
Packaged Weight	17.7 kg

Product Details

Country of Origin	Ukraine
Product Material	Mfc Painted Matt
Colour/Finish	Stiffkey Blue
Mount Type	Floor
Style	Traditional
Handle Type	Knob
Construction Method	Cam & Wood Dowel
Ce Certified	Yes
Construction Type	Rigid
Fascia Finish	Mdf Painted Matt
Fsc Certified	Yes
Handles Included	Yes
Material Thickness	16 mm
No. Doors	1
Waste Shroud	No

© ROXOR Group