Sales Code: BAYF82DPG0F

Barcode: 5056817795641

Brand: Bayswater

Description: Bayswater 800mm Plummett Grey 2 Door Floor Standing Cabinet With Fireclay Basin



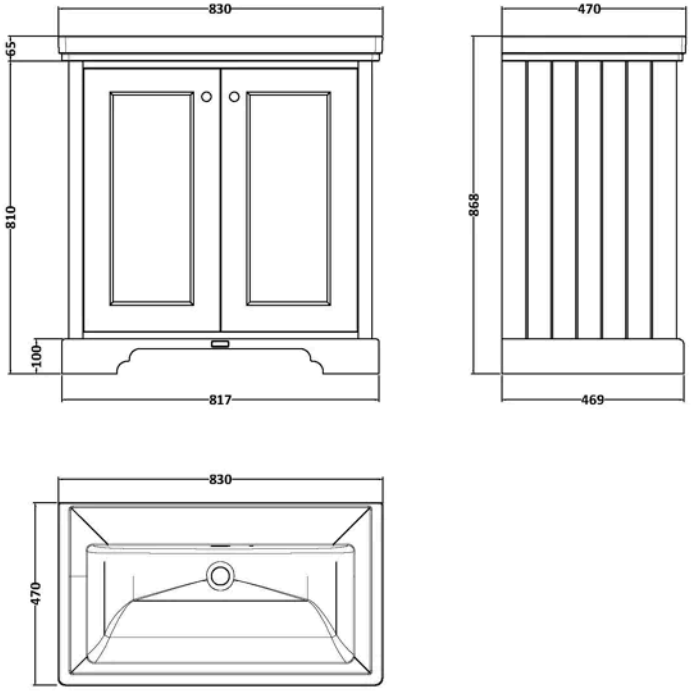

Product Dimensions

Product	996 x 1647 x 939mm (H x W x D)
Packaged	1105 x 1700 x 1005mm (H x W x D)
Nett Weight	58.5 kg
Packaged Weight	58.5 kg

Product Details

Country of Origin	Ukraine
Product Material	Fireclay,Mfc Painted Matt
Colour/Finish	Plummett Grey
Mount Type	Floor
Style	Traditional
Handle Type	Knob
Construction Method	Cam & Wood Dowel
Construction Type	Rigid
Fascia Finish	Mdf Painted Matt
Handles Included	Yes
Inner Bowl Depth	295 mm
Inner Bowl Height	134 mm
Inner Bowl Width	680 mm
Material Thickness	16 mm
No. Doors	2
No. Of Tapholes	No Tapholes
Number Of Bowls	1
Overflow Included	Yes

© ROXOR Group

Sales Code: BAYC515 **Barcode:** 5056678499948 **Brand:** Bayswater **Description:** Bayswater 0 Tap Hole 800mm Traditional Fireclay Basin



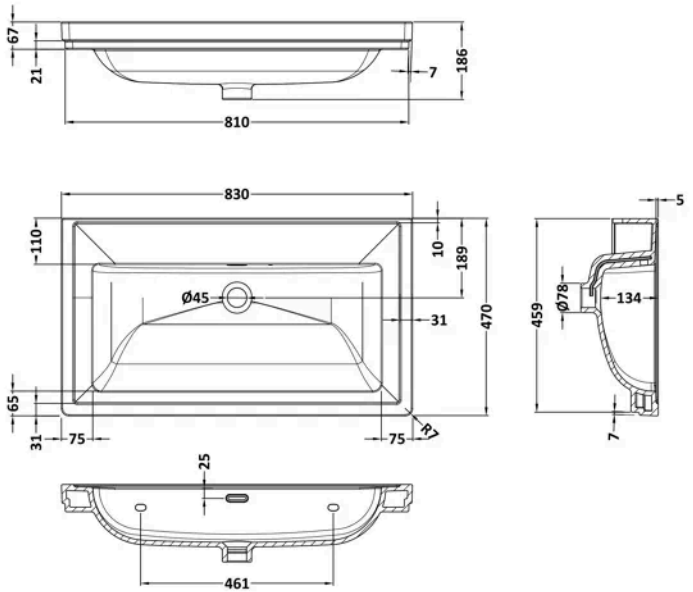

Product Dimensions

Product	186 x 830 x 470mm (H x W x D)
Packaged	490 x 850 x 220mm (H x W x D)
Nett Weight	21.5 kg
Packaged Weight	21.5 kg

Packaging Details

Label Size (mm)	50 x 100
Label Colour	White
Label Qty	2.0000

Product Details

Country of Origin	United Arab Emirates
Product Material	Fireclay
Colour/Finish	White
Style	Traditional
Bottle Trap Included	No
Ce Certified	Yes
Inner Bowl Depth	295 mm
Inner Bowl Height	134 mm
Inner Bowl Width	680 mm
No. Of Tapholes	No Tapholes
Number Of Bowls	1
Overflow Cover Included	No
Overflow Included	Yes
Tap Included	No
Waste Included	No

© ROXOR Group

Sales Code: BAYF104 **Barcode:** 5055275892848 **Brand:** Bayswater **Description:** Bayswater 800mm Plummett Grey 2 Door Floor Standing Vanity Unit



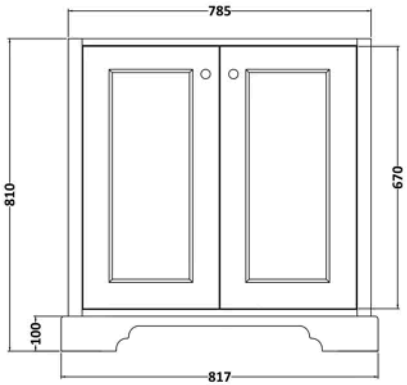

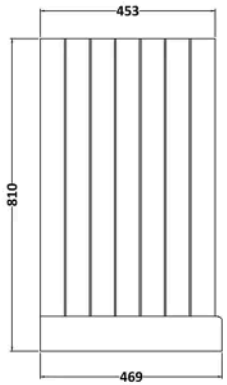

Product Dimensions

Product	810 x 817 x 469mm (H x W x D)
Packaged	845 x 860 x 505mm (H x W x D)
Nett Weight	37 kg
Packaged Weight	37 kg

Product Details

Country of Origin	Ukraine
Product Material	Mfc Painted Matt
Colour/Finish	Plummett Grey
Mount Type	Floor
Style	Traditional
Handle Type	Knob
Construction Method	Cam & Wood Dowel
Ce Certified	Yes
Construction Type	Rigid
Fascia Finish	Mdf Painted Matt
Fsc Certified	Yes
Handles Included	Yes
Material Thickness	16 mm
No. Doors	2
Waste Shroud	No

© ROXOR Group