Sales Code: BAYF82DCB1GT

Barcode: 5056817741631

Brand: Bayswater

Description: Bayswater 800mm Matt Black 2 Door Floor Standing Cabinet With 1 Tap Hole Basin With Grey Marble Worktop



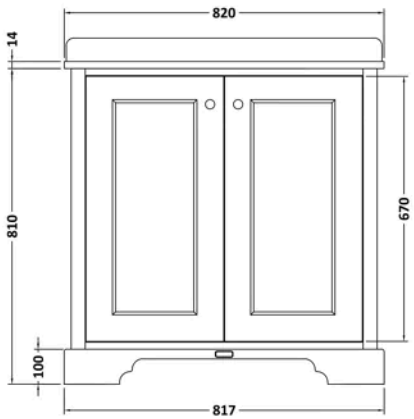

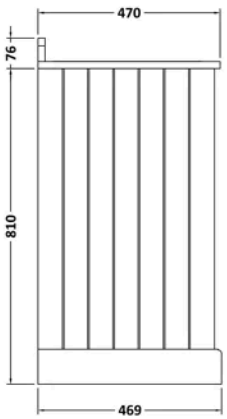

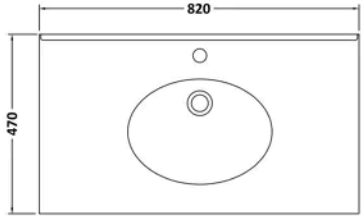

Product Dimensions

Product	886 x 820 x 470mm (H x W x D)
Packaged	1105 x 1700 x 1005mm (H x W x D)
Nett Weight	55.5 kg
Packaged Weight	55.5 kg

Product Details

Country of Origin	Ukraine
Product Material	Mfc Painted Matt,Natural Marble,Vitreous China
Colour/Finish	Matt Black
Mount Type	Floor
Style	Traditional
Handle Type	Knob
Construction Method	Cam & Wood Dowel
Construction Type	Rigid
Fascia Finish	Mdf Painted Matt
Handles Included	Yes
Inner Bowl Height	160 mm
Material Thickness	16 mm
No. Doors	2
No. Of Tapholes	1
No. Shelves	1
Number Of Bowls	1
Number Of Shelves	1
Overflow Cover Included	Yes
Overflow Included	Yes
Tap Included	No
Waste Included	No
Waste Shroud	No

© ROXOR Group

Sales Code: BAYC229 **Barcode:** 5055275892619 **Brand:** Bayswater **Description:** Bayswater 1 Tap Hole 800mm Single Bowl Grey Marble Top Basin



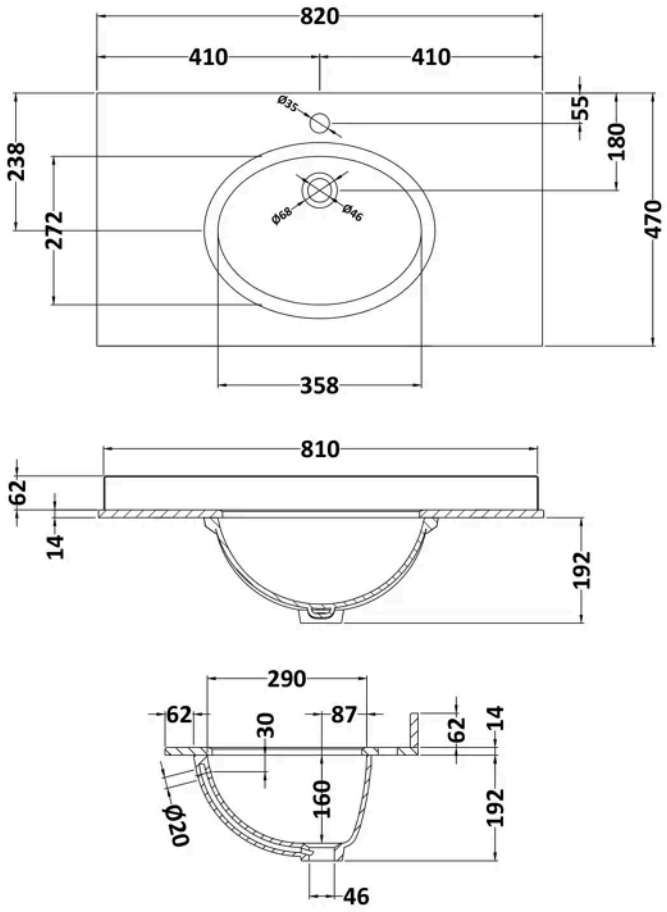

Product Dimensions

Product	268 x 820 x 463mm (H x W x D)
Packaged	310 x 900 x 550mm (H x W x D)
Nett Weight	18 kg
Packaged Weight	18.5 kg

Product Details

Country of Origin	China
Product Material	Vitreous China
Colour/Finish	Grey
Style	Traditional
Inner Bowl Height	160 mm
No. Of Tapholes	1
Number Of Bowls	1
Overflow Cover Included	No
Overflow Included	Yes
Tap Included	No
Waste Included	No

© ROXOR Group

Sales Code: BAYF404 **Barcode:** 5056462647166 **Brand:** Bayswater **Description:** Bayswater 800mm Matt Black 2 Door Floor Standing Vanity Unit



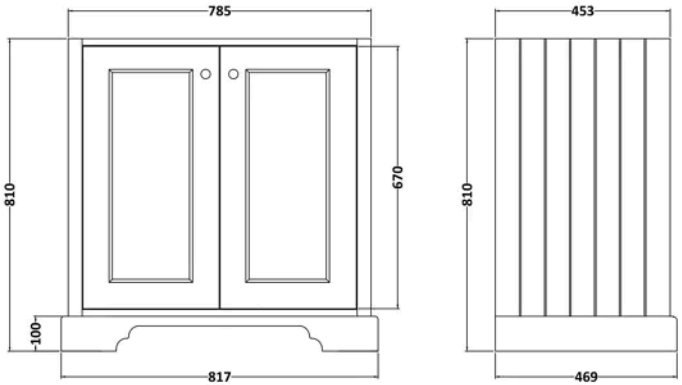

Product Dimensions

Product	810 x 817 x 469mm (H x W x D)
Packaged	845 x 860 x 505mm (H x W x D)
Nett Weight	37 kg
Packaged Weight	37 kg

Product Details

Country of Origin	Ukraine
Product Material	Mfc Painted Matt
Colour/Finish	Matt Black
Mount Type	Floor
Style	Traditional
Handle Type	Knob
Construction Method	Cam & Wood Dowel
Ce Certified	Yes
Construction Type	Rigid
Fascia Finish	Mdf Painted Matt
Fsc Certified	Yes
Handles Included	Yes
Material Thickness	16 mm
No. Doors	2

© ROXOR Group