**Sales Code:** BAYF753DSB1GT

**Barcode:** 5056817742126

**Brand:** Bayswater

**Description:** Bayswater 750mm Stiffkey Blue Angled 3 Door Floor Standing Cabinet With 1 Tap Hole Basin With Marble Worktop



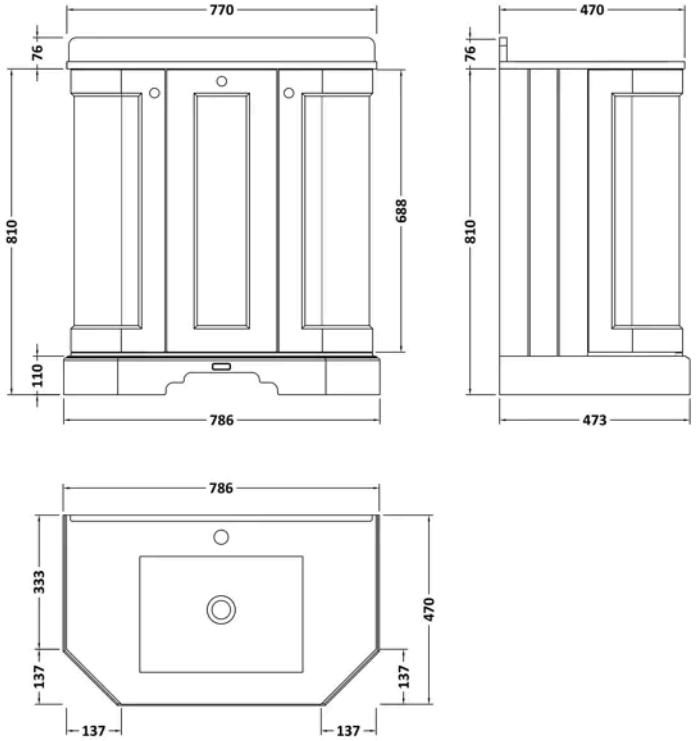


## Product Dimensions

| | |
|---|---|
| Product | 886 x 786 x 473mm (H x W x D) |
| Packaged | 1100 x 1665 x 1385mm (H x W x D) |
| Nett Weight | 51.5 kg |
| Packaged Weight | 51.5 kg |

## Product Details

| | |
|---|---|
| Country of Origin | Ukraine |
| Product Material | Mfc Painted Matt,Natural Marble,Vitreous China |
| Colour/Finish | Stiffkey Blue |
| Mount Type | Floor |
| Style | Traditional |
| Handle Type | Knob |
| Construction Method | Cam & Wood Dowel |
| Construction Type | Rigid |
| Fascia Finish | Mdf Vinyl Textured Woodgrain |
| Handles Included | Yes |
| Inner Bowl Height | 160 mm |
| Material Thickness | 18 mm |
| No. Doors | 3 |
| No. Of Tapholes | 1 |
| No. Shelves | 1 |
| Number Of Bowls | 1 |
| Number Of Shelves | 1 |
| Overflow Cover Included | Yes |
| Overflow Included | Yes |
| Tap Included | No |
| Waste Included | No |
| Waste Shroud | No |

© ROXOR Group

**Sales Code:** BAYC262 **Barcode:** 5056817726560 **Brand:** Bayswater **Description:** Bayswater 1 Tap Hole 750mm Single Bowl Angled Grey Marble Top Basin



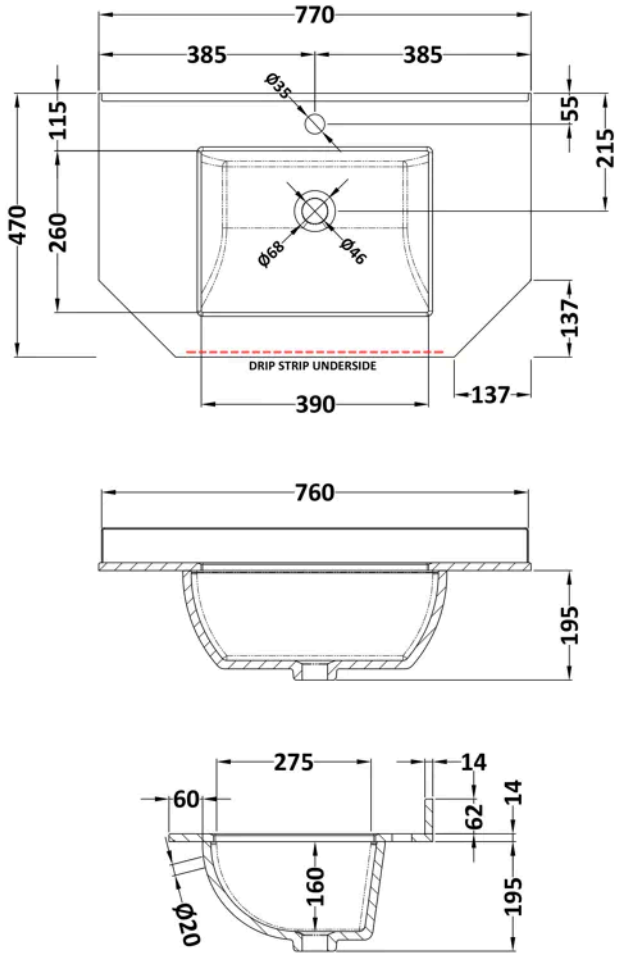


## Product Dimensions

| | |
|---|---|
| Product | 268 x 770 x 470mm (H x W x D) |
| Packaged | 250 x 860 x 580mm (H x W x D) |
| Nett Weight | 18 kg |
| Packaged Weight | 18.5 kg |

## Product Details

| | |
|---|---|
| Country of Origin | China |
| Product Material | Vitreous China |
| Colour/Finish | Grey |
| Style | Traditional |
| Inner Bowl Height | 160 mm |
| No. Of Tapholes | 1 |
| Number Of Bowls | 1 |
| Overflow Included | Yes |
| Tap Included | No |
| Waste Included | No |

© ROXOR Group

**Sales Code:** BAYF391 **Barcode:** 5056817723682 **Brand:** Bayswater **Description:** Bayswater 750mm Stiffkey Blue 3 Door Angled Floor Standing Vanity Unit



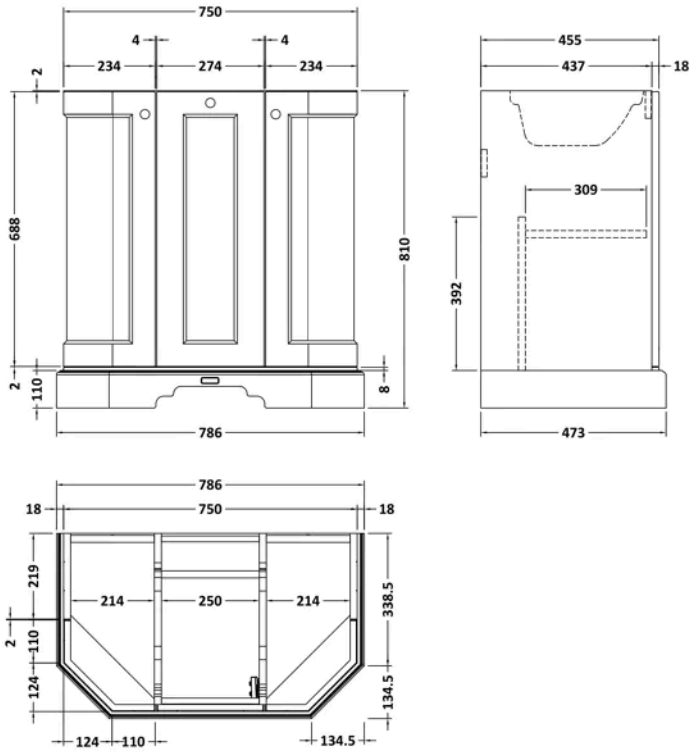


## Product Dimensions

| | |
|---|---|
| Product | 810 x 786 x 473mm (H x W x D) |
| Packaged | 851 x 854 x 511mm (H x W x D) |
| Nett Weight | 32.5 kg |
| Packaged Weight | 33 kg |

## Product Details

| | |
|---|---|
| Country of Origin | Republic of Ireland |
| Product Material | Mfc Painted Matt |
| Colour/Finish | Stiffkey Blue |
| Mount Type | Floor |
| Style | Traditional |
| Handle Type | Knob |
| Construction Method | Cam & Wood Dowel |
| Construction Type | Rigid |
| Fascia Finish | Mdf Vinyl Textured Woodgrain |
| Fsc Certified | Yes |
| Handles Included | Yes |
| Material Thickness | 18 mm |
| No. Doors | 3 |

© ROXOR Group