Sales Code: BAYF753DCB1BT

Barcode: 5056817742034

Brand: Bayswater

Description: Bayswater 750mm Matt Black Angled 3 Door Floor Standing Cabinet With 1 Tap Hole Basin With Marble Worktop



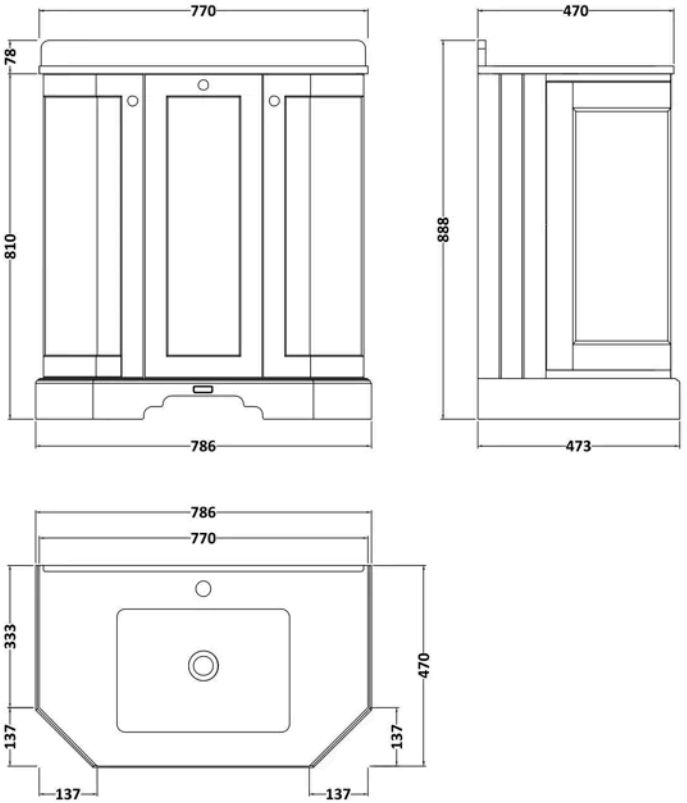

Product Dimensions

Product	886 x 786 x 473mm (H x W x D)
Packaged	1100 x 1665 x 1385mm (H x W x D)
Nett Weight	51.5 kg
Packaged Weight	51.5 kg

Product Details

Country of Origin	Ukraine
Product Material	Mfc Painted Matt,Natural Marble,Vitreous China
Colour/Finish	Matt Black
Mount Type	Floor
Style	Traditional
Handle Type	Knob
Construction Method	Cam & Wood Dowel
Construction Type	Rigid
Fascia Finish	Mdf Vinyl Textured Woodgrain
Handles Included	Yes
Inner Bowl Height	160 mm
Material Thickness	18 mm
No. Doors	3
No. Of Tapholes	1
No. Shelves	1
Number Of Bowls	1
Number Of Shelves	1
Overflow Cover Included	Yes
Overflow Included	Yes
Tap Included	No
Waste Included	No
Waste Shroud	No

© ROXOR Group

Sales Code: BAYC260 **Barcode:** 5056817726546 **Brand:** Bayswater **Description:** Bayswater 1 Tap Hole 750mm Single Bowl Angled Black Marble Top Basin



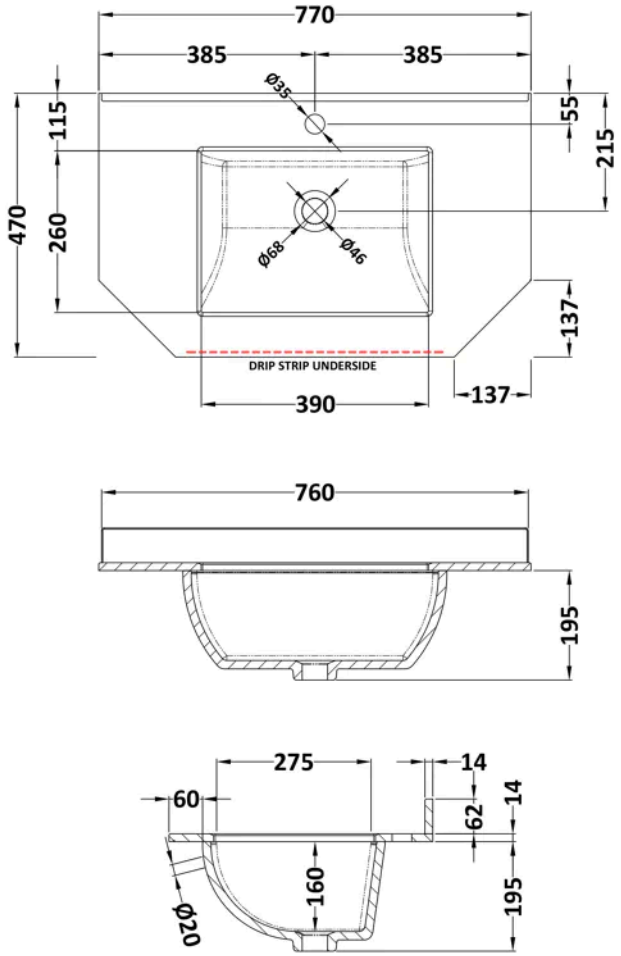

Product Dimensions

Product	268 x 770 x 470mm (H x W x D)
Packaged	250 x 860 x 580mm (H x W x D)
Nett Weight	18 kg
Packaged Weight	18.5 kg

Packaging Details

Box Qty	1

Product Details

Country of Origin	China
Product Material	Vitreous China
Colour/Finish	Black

© ROXOR Group

Sales Code: BAYF491 **Barcode:** 5056817723699 **Brand:** Bayswater **Description:** Bayswater 750mm Matt Black 3 Door Angled Floor Standing Vanity Unit



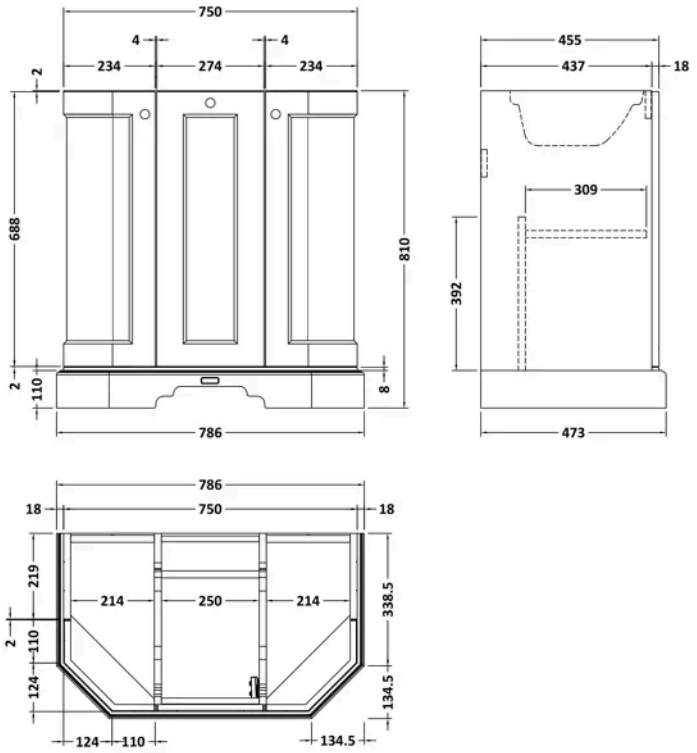

Product Dimensions

Product	810 x 786 x 473mm (H x W x D)
Packaged	851 x 854 x 511mm (H x W x D)
Nett Weight	32.5 kg
Packaged Weight	33 kg

Product Details

Country of Origin	Republic of Ireland
Product Material	Mfc Painted Matt
Colour/Finish	Matt Black
Mount Type	Floor
Style	Traditional
Handle Type	Knob
Construction Method	Cam & Wood Dowel
Construction Type	Rigid
Fascia Finish	Mdf Vinyl Textured Woodgrain
Fsc Certified	Yes
Handles Included	Yes
Material Thickness	18 mm
No. Doors	3

© ROXOR Group