Sales Code: BAYF62DSB3WT

Barcode: 5056817795399

Brand: Bayswater

Description: Bayswater 600mm Stiffkey Blue 2 Door Floor Standing Cabinet With 3 Tap Hole Basin With White Worktop



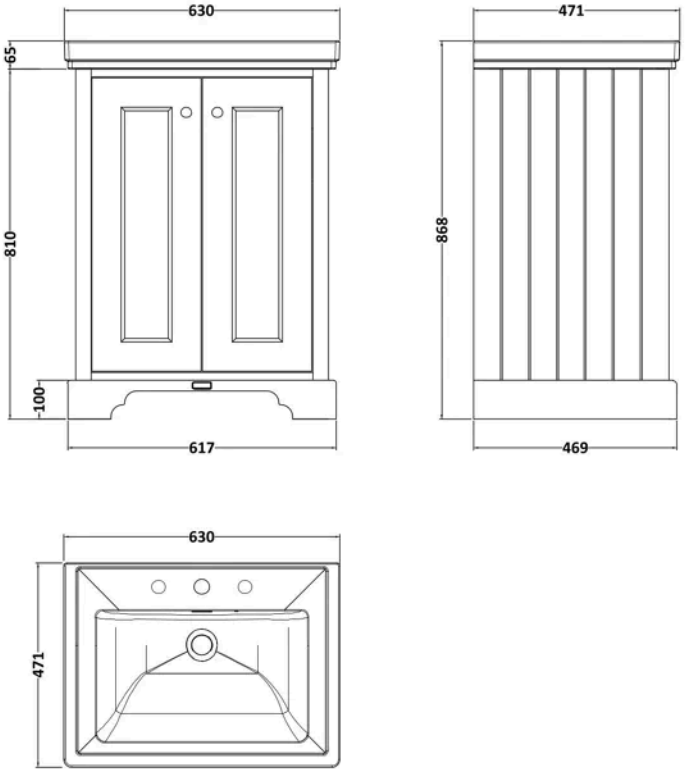

Product Dimensions

Product	1078 x 1237 x 932mm (H x W x D)
Packaged	1155 x 1360 x 1055mm (H x W x D)
Nett Weight	44.5 kg
Packaged Weight	44.5 kg

Product Details

Country of Origin	Ukraine
Product Material	Mfc Painted Matt,Vitreous China
Colour/Finish	Stiffkey Blue
Mount Type	Floor
Style	Traditional
Handle Type	Knob
Construction Method	Cam & Wood Dowel
Construction Type	Rigid
Fascia Finish	Mdf Painted Matt
Handles Included	Yes
Inner Bowl Height	160 mm
Material Thickness	16 mm
No. Doors	2
No. Of Tapholes	3
Number Of Bowls	1
Overflow Included	Yes

© ROXOR Group

Sales Code: BAYC225 **Barcode:** 5055275892572 **Brand:** Bayswater **Description:** Bayswater 3 Tap Hole 600mm Single Bowl White Marble Top Basin



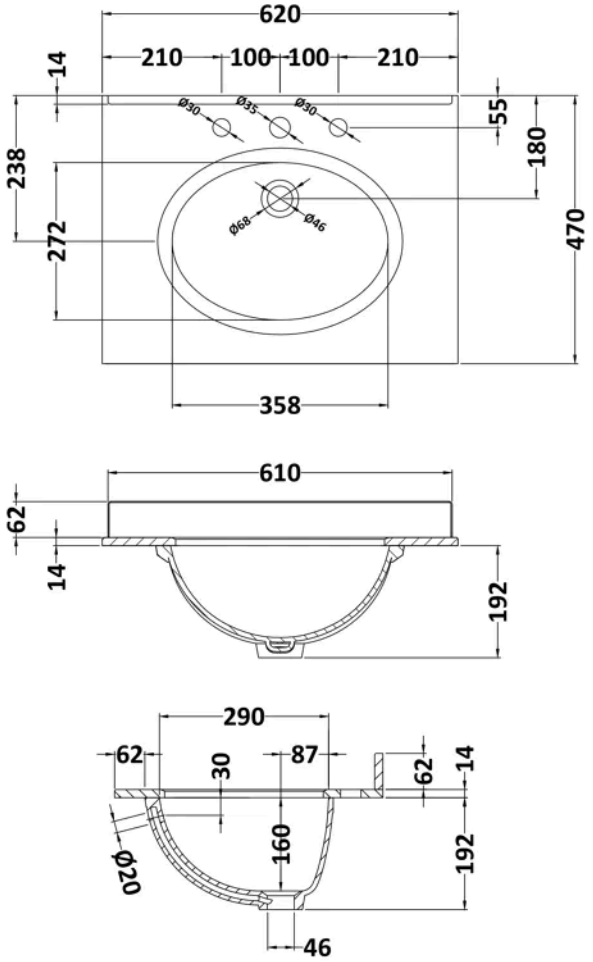

Product Dimensions

Product	268 x 620 x 463mm (H x W x D)
Packaged	310 x 700 x 550mm (H x W x D)
Nett Weight	13.5 kg
Packaged Weight	14 kg

Product Details

Country of Origin	China
Product Material	Vitreous China
Colour/Finish	White
Style	Traditional
Inner Bowl Height	160 mm
No. Of Tapholes	3
Number Of Bowls	1
Overflow Cover Included	No
Overflow Included	Yes
Tap Included	No
Waste Included	No

© ROXOR Group

Sales Code: BAYF102 **Barcode:** 5055275892824 **Brand:** Bayswater **Description:** Bayswater 600mm Stiffkey Blue 2 Door Floor Standing Vanity Unit



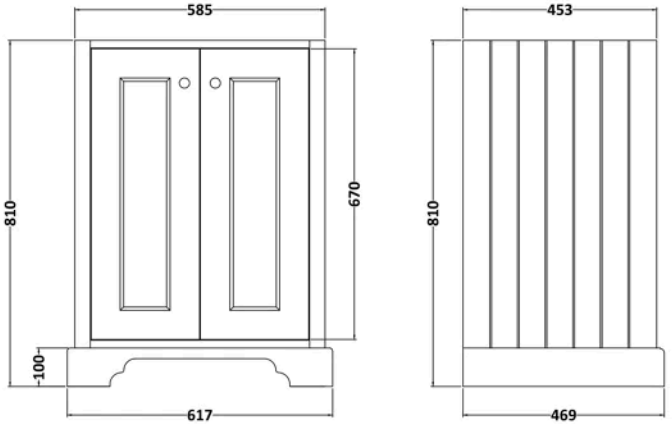

Product Dimensions

Product	810 x 617 x 469mm (H x W x D)
Packaged	845 x 660 x 505mm (H x W x D)
Nett Weight	30.5 kg
Packaged Weight	30.5 kg

Product Details

Country of Origin	Ukraine
Product Material	Mfc Painted Matt
Colour/Finish	Stiffkey Blue
Mount Type	Floor
Style	Traditional
Handle Type	Knob
Construction Method	Cam & Wood Dowel
Ce Certified	Yes
Construction Type	Rigid
Fascia Finish	Mdf Painted Matt
Fsc Certified	Yes
Handles Included	Yes
Material Thickness	16 mm
No. Doors	2
Waste Shroud	No

© ROXOR Group