Sales Code: BAYF428 **Barcode:** 5056462647272 **Brand:** Bayswater **Description:** Bayswater 650mm Matt Black Wall Hung Mirror Cabinet



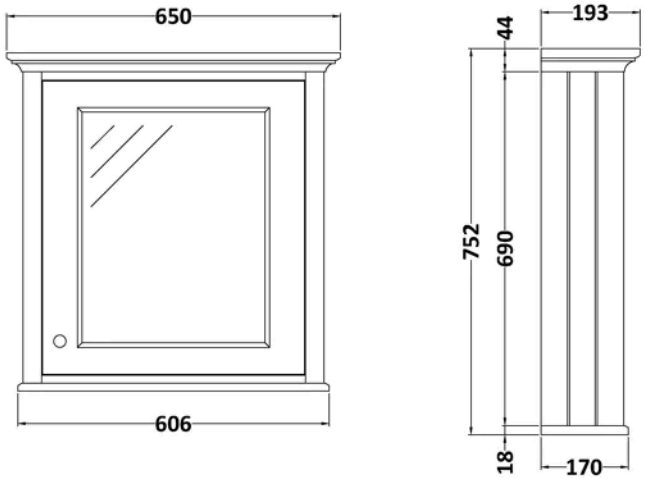

Product Dimensions

Product	752 x 650 x 193mm (H x W x D)
Packaged	790 x 690 x 235mm (H x W x D)
Nett Weight	24 kg
Packaged Weight	24.5 kg

Product Details

Country of Origin	Ukraine
Product Material	Mfc Painted Matt
Colour/Finish	Matt Black
Mount Type	Wall Hung
Style	Traditional
Handle Type	Knob
Construction Method	Cam & Wood Dowel
Ce Certified	Yes
Construction Type	Rigid
Fascia Finish	Mdf Painted Matt
Handle Material	Metal
Handles Included	Yes
Material Thickness	16 mm
No. Doors	1
No. Shelves	1
Number Of Shelves	1

© ROXOR Group