**Sales Code:** BAYF124DPG1BT

**Barcode:** 5056817741860

**Brand:** Bayswater

**Description:** Bayswater 1200mm Plummett Grey 4 Door Floor Standing Cabinet With Black Twin Marble Basin



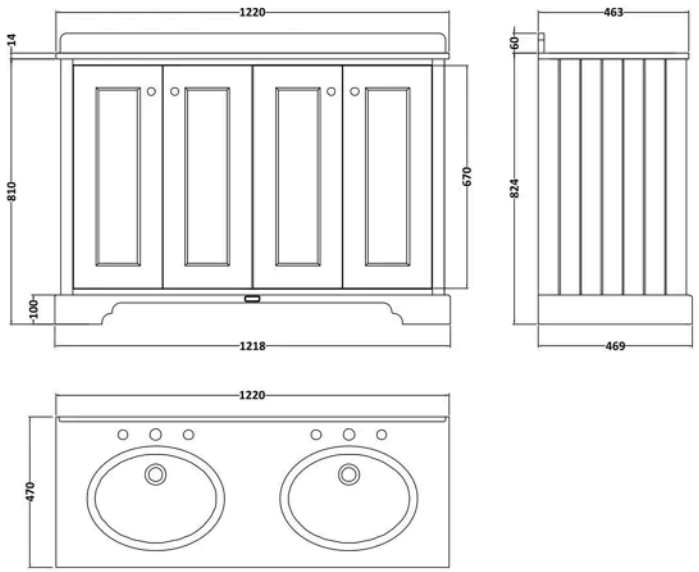


## Product Dimensions

| | |
|---|---|
| Product | 886 x 1220 x 470mm (H x W x D) |
| Packaged | 1155 x 1950 x 1055mm (H x W x D) |
| Nett Weight | 83.5 kg |
| Packaged Weight | 83.5 kg |

## Product Details

| | |
|---|---|
| Country of Origin | Ukraine |
| Product Material | Mfc Painted Matt,Natural Marble,Vitreous China |
| Colour/Finish | Plummett Grey |
| Mount Type | Floor |
| Style | Traditional |
| Handle Type | Knob |
| Construction Method | Cam & Wood Dowel |
| Construction Type | Rigid |
| Fascia Finish | Mdf Painted Matt |
| Handles Included | Yes |
| Inner Bowl Height | 160 mm |
| Material Thickness | 16 mm |
| No. Doors | 4 |
| No. Of Tapholes | 1 |
| No. Shelves | 1 |
| Number Of Bowls | 2 |
| Number Of Shelves | 1 |
| Overflow Cover Included | Yes |
| Overflow Included | Yes |
| Tap Included | No |
| Waste Included | No |
| Waste Shroud | No |

© ROXOR Group

**Sales Code:** BAYC233 **Barcode:** 5055275892657 **Brand:** Bayswater **Description:** Bayswater 1 Tap Hole 1200mm Double Bowl Black Marble Top Basin



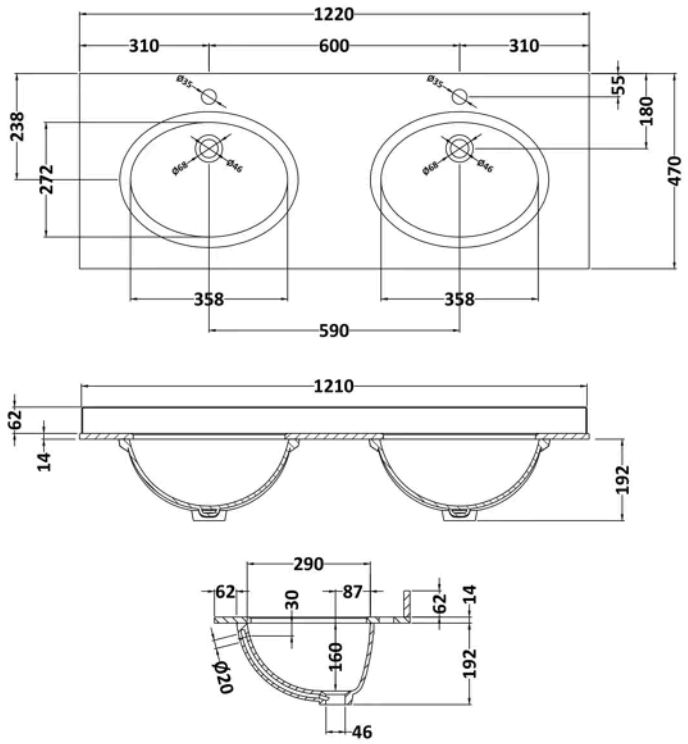


## Product Dimensions

| | |
|---|---|
| Product | 268 x 1220 x 463mm (H x W x D) |
| Packaged | 310 x 1300 x 550mm (H x W x D) |
| Nett Weight | 27.5 kg |
| Packaged Weight | 28 kg |

## Product Details

| | |
|---|---|
| Country of Origin | China |
| Product Material | Vitreous China |
| Colour/Finish | Black |
| Style | Traditional |
| Inner Bowl Height | 160 mm |
| No. Of Tapholes | 1 |
| Number Of Bowls | 2 |
| Overflow Cover Included | No |
| Overflow Included | Yes |
| Tap Included | No |
| Waste Included | No |

© ROXOR Group

**Sales Code:** BAYF107 **Barcode:** 5055275892879 **Brand:** Bayswater **Description:** Bayswater 1200mm Plummett Grey 4 Door Floor Standing Vanity Unit



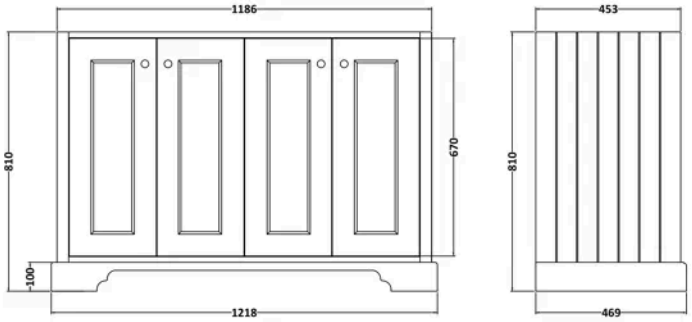


## Product Dimensions

| | |
|---|---|
| Product | 810 x 1218 x 469mm (H x W x D) |
| Packaged | 845 x 1250 x 505mm (H x W x D) |
| Nett Weight | 55 kg |
| Packaged Weight | 55.5 kg |

## Product Details

| | |
|---|---|
| Country of Origin | Ukraine |
| Product Material | Mfc Painted Matt |
| Colour/Finish | Plummett Grey |
| Mount Type | Floor |
| Style | Traditional |
| Handle Type | Knob |
| Construction Method | Cam & Wood Dowel |
| Ce Certified | Yes |
| Construction Type | Rigid |
| Fascia Finish | Mdf Painted Matt |
| Fsc Certified | Yes |
| Handles Included | Yes |
| Material Thickness | 16 mm |
| No. Doors | 4 |
| Waste Shroud | No |

© ROXOR Group