Sales Code: BAYF124DHG3GT

Barcode: 5056817796402

Brand: Bayswater

Description: Bayswater 1200mm Hunter Green 4 Door Floor Standing Cabinet With Grey Twin Marble Basin



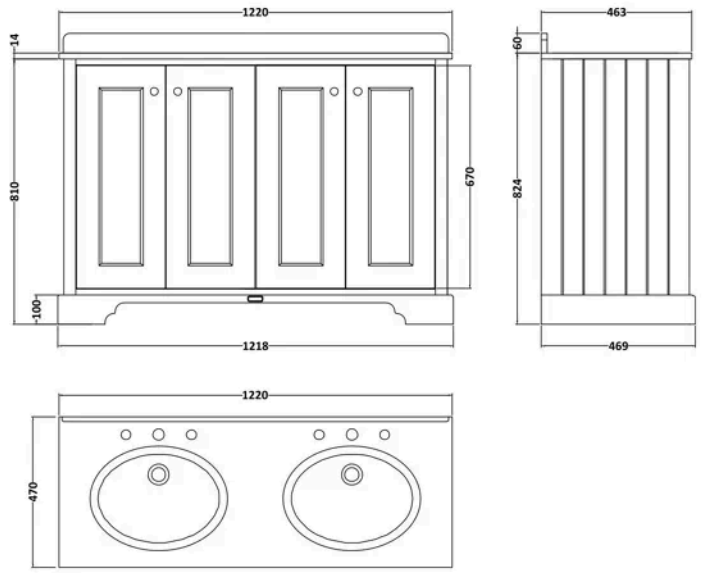

Product Dimensions

Product	1078 x 2438 x 932mm (H x W x D)
Packaged	1155 x 1950 x 1055mm (H x W x D)
Nett Weight	83.5 kg
Packaged Weight	83.5 kg

Product Details

Country of Origin	Ukraine
Product Material	Mfc Painted Matt,Vitreous China
Colour/Finish	Hunter Green
Mount Type	Floor
Style	Traditional
Handle Type	Knob
Construction Method	Cam & Wood Dowel
Construction Type	Rigid
Fascia Finish	Mdf Painted Matt
Handles Included	Yes
Inner Bowl Height	160 mm
Material Thickness	16 mm
No. Doors	4
No. Of Tapholes	3
Number Of Bowls	2
Overflow Included	Yes

© ROXOR Group

Sales Code: BAYC238 **Barcode:** 5055275892701 **Brand:** Bayswater **Description:** Bayswater 3 Tap Hole 1200mm Double Bowl Grey Marble Top Basin



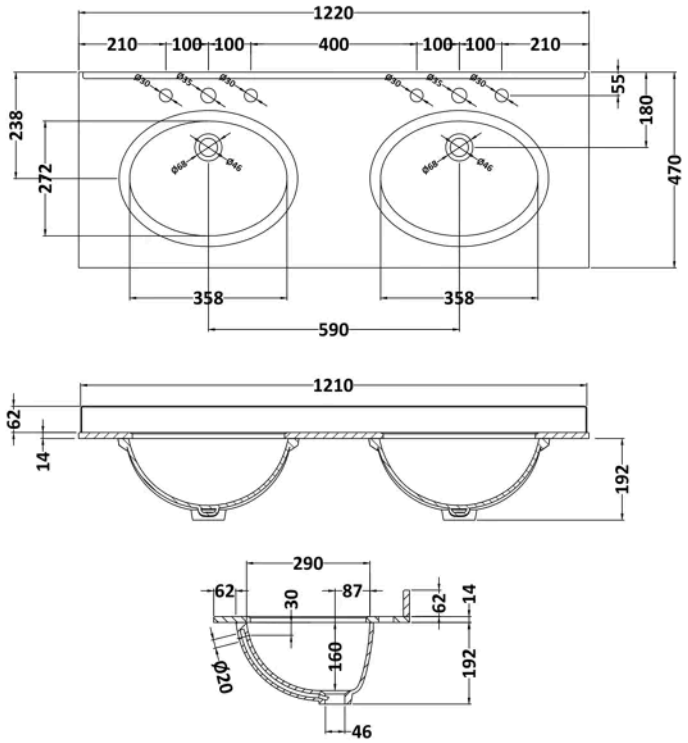

Product Dimensions

Product	268 x 1220 x 463mm (H x W x D)
Packaged	310 x 1300 x 550mm (H x W x D)
Nett Weight	27.5 kg
Packaged Weight	28 kg

Packaging Details

Box Qty	1

Product Details

Country of Origin	China
Product Material	Vitreous China
Colour/Finish	Grey
Inner Bowl Height	160 mm
No. Of Tapholes	3
Number Of Bowls	2

© ROXOR Group

Sales Code: BAYF807 **Barcode:** 5056817723446 **Brand:** Bayswater **Description:** Bayswater 1200mm Hunter Green 4 Door Floor Standing Vanity Unit



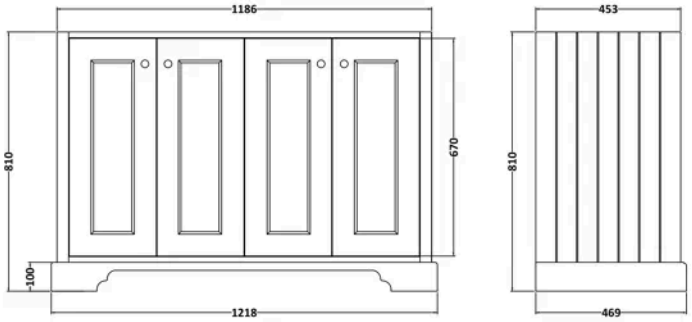

Product Dimensions

Product	810 x 1218 x 469mm (H x W x D)
Packaged	845 x 1250 x 505mm (H x W x D)
Nett Weight	55 kg
Packaged Weight	55.5 kg

Product Details

Country of Origin	Ukraine
Product Material	Mfc Painted Matt
Colour/Finish	Hunter Green
Mount Type	Floor
Style	Traditional
Handle Type	Knob
Construction Method	Cam & Wood Dowel
Ce Certified	Yes
Construction Type	Rigid
Fascia Finish	Mdf Painted Matt
Fsc Certified	Yes
Handles Included	Yes
Material Thickness	16 mm
No. Doors	4
Waste Shroud	No

© ROXOR Group