Sales Code: BAYF124DCPW1WT

Barcode: 5056817797010

Brand: Bayswater

Description: Bayswater 1200mm Pointing White 4 Door Floor Standing Cabinet With Twin Marble Basin



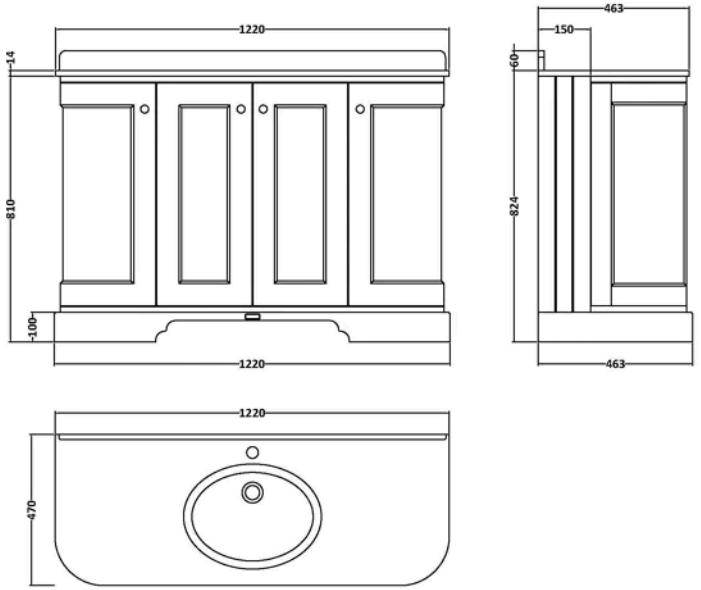

Product Dimensions

Product	1078 x 2440 x 926mm (H x W x D)
Packaged	1155 x 1950 x 1055mm (H x W x D)
Nett Weight	81 kg
Packaged Weight	81 kg

Product Details

Country of Origin	Ukraine
Product Material	Mfc Painted Matt,Vitreous China
Colour/Finish	Pointing White
Mount Type	Floor
Style	Traditional
Handle Type	Knob
Construction Method	Cam & Wood Dowel
Construction Type	Rigid
Fascia Finish	Mdf Painted Matt
Handles Included	Yes
Inner Bowl Height	160 mm
Material Thickness	16 mm
No. Doors	4
No. Of Tapholes	1
Number Of Bowls	1
Overflow Included	Yes

© ROXOR Group

Sales Code: BAYC240 **Barcode:** 5055275892725 **Brand:** Bayswater **Description:** Bayswater 1 Tap Hole 1200mm Single Bowl White Marble Top Basin With Radius



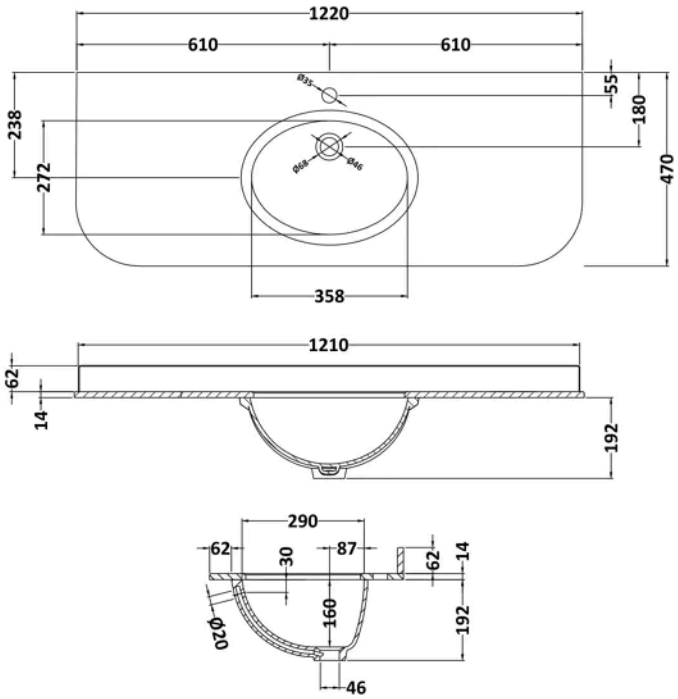

Product Dimensions

Product	268 x 1220 x 463mm (H x W x D)
Packaged	310 x 1300 x 550mm (H x W x D)
Nett Weight	24.5 kg
Packaged Weight	25 kg

Product Details

Country of Origin	China
Product Material	Vitreous China
Colour/Finish	White
Style	Traditional
Inner Bowl Height	160 mm
No. Of Tapholes	1
Number Of Bowls	1
Overflow Cover Included	No
Overflow Included	Yes
Tap Included	No
Waste Included	No

© ROXOR Group

Sales Code: BAYF166 **Barcode:** 5056211825692 **Brand:** Bayswater **Description:** Bayswater 1200mm Pointing White 4 Door Curved Floor Standing Vanity Unit



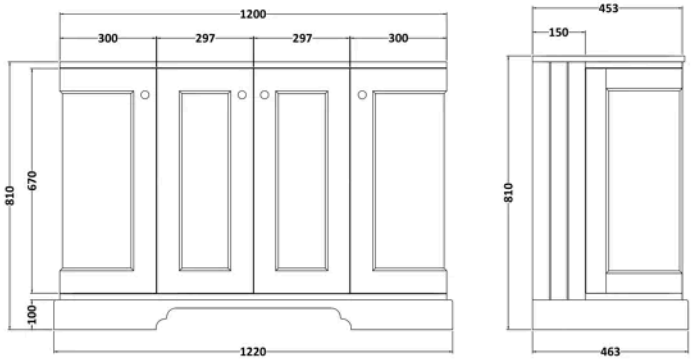

Product Dimensions

Product	810 x 1220 x 463mm (H x W x D)
Packaged	845 x 1250 x 505mm (H x W x D)
Nett Weight	55 kg
Packaged Weight	56 kg

Product Details

Country of Origin	Ukraine
Product Material	Mfc Painted Matt
Colour/Finish	Pointing White
Mount Type	Floor
Style	Traditional
Handle Type	Knob
Construction Method	Cam & Wood Dowel
Ce Certified	Yes
Construction Type	Rigid
Fascia Finish	Mdf Painted Matt
Fsc Certified	Yes
Handles Included	Yes
Material Thickness	16 mm
No. Doors	4
Waste Shroud	No

© ROXOR Group