Sales Code: BAYF124DCB1CT **Barcode:** 5056817796358 **Brand:** Bayswater **Description:** Bayswater 1200mm Matt Black 4 Door Floor Standing Cabinet With Twin Basin



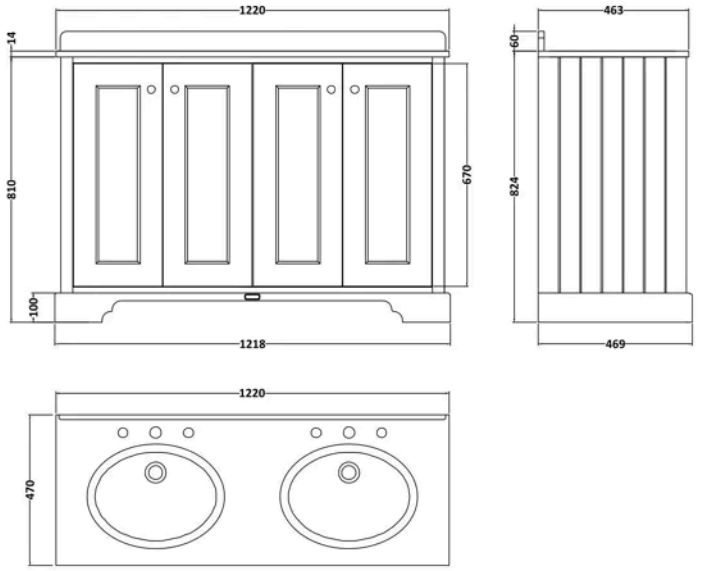

Product Dimensions

Product	1078 x 2438 x 932mm (H x W x D)
Packaged	1155 x 1950 x 1055mm (H x W x D)
Nett Weight	86.5 kg
Packaged Weight	86.5 kg

Product Details

Country of Origin	Ukraine
Product Material	Mfc Painted Matt,Vitreous China
Colour/Finish	Matt Black
Mount Type	Floor
Style	Traditional
Handle Type	Knob
Construction Method	Cam & Wood Dowel
Construction Type	Rigid
Fascia Finish	Mdf Painted Matt
Handles Included	Yes
Inner Bowl Depth	272 mm
Inner Bowl Height	160 mm
Inner Bowl Width	358 mm
Material Thickness	16 mm
No. Doors	4
No. Of Tapholes	1
Number Of Bowls	2
Overflow Included	Yes

© ROXOR Group

Sales Code: BAYC259 **Barcode:** 5056678499382 **Brand:** Bayswater **Description:** Bayswater 1 Tap Hole 1200mm Single Bowl White Marble Top Basin With Radius



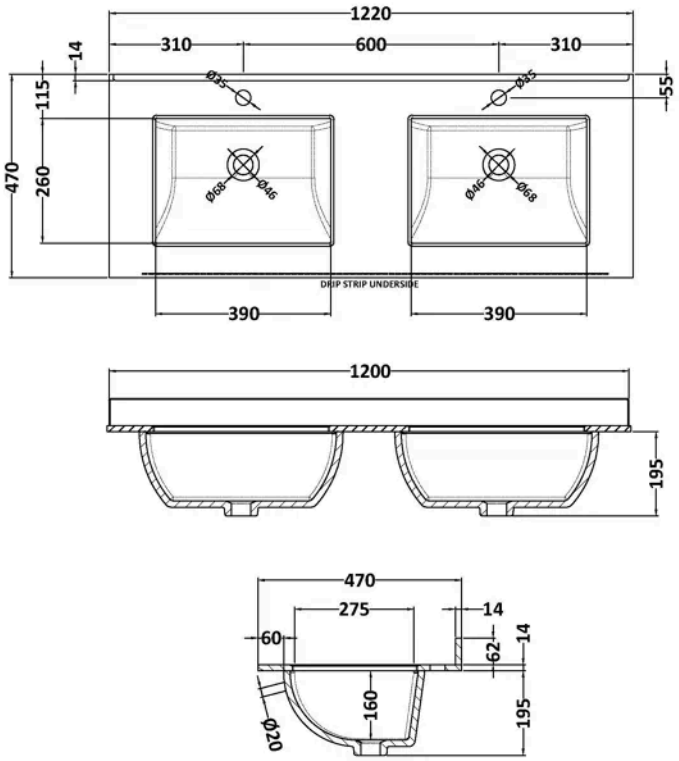

Product Dimensions

Product	209 x 1220 x 470mm (H x W x D)
Packaged	250 x 1320 x 580mm (H x W x D)
Nett Weight	30.5 kg
Packaged Weight	31 kg

Packaging Details

Box Qty	1
Label Size (mm)	50 x 100
Label Colour	White
Label Qty	2.0000

Product Details

Country of Origin	China
Product Material	Vitreous China
Colour/Finish	White
Style	Traditional
Bottle Trap Included	No
Ce Certified	Yes
Inner Bowl Depth	260 mm
Inner Bowl Height	160 mm
Inner Bowl Width	390 mm
No. Of Tapholes	1
Number Of Bowls	2
Overflow Cover Included	No
Overflow Included	Yes
Tap Included	No
Waste Included	No

© ROXOR Group

Sales Code: BAYF407 **Barcode:** 5056462647197 **Brand:** Bayswater **Description:** Bayswater 1200mm Matt Black 4 Door Floor Standing Vanity Unit



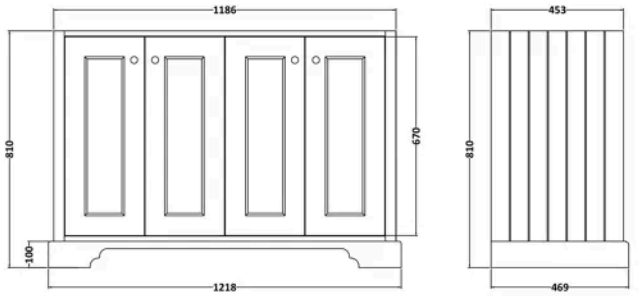

Product Dimensions

Product	810 x 1218 x 469mm (H x W x D)
Packaged	845 x 1250 x 505mm (H x W x D)
Nett Weight	55 kg
Packaged Weight	55.5 kg

Product Details

Country of Origin	Ukraine
Product Material	Mfc Painted Matt
Colour/Finish	Matt Black
Mount Type	Floor
Style	Traditional
Handle Type	Knob
Construction Method	Cam & Wood Dowel
Ce Certified	Yes
Construction Type	Rigid
Fascia Finish	Mdf Painted Matt
Fsc Certified	Yes
Handles Included	Yes
Material Thickness	16 mm
No. Doors	4

© ROXOR Group