Sales Code: BAYF116 **Barcode:** 5055275892961 **Brand:** Bayswater **Description:** Bayswater 487mm Plummett Grey Floor Standing Tall Cabinet

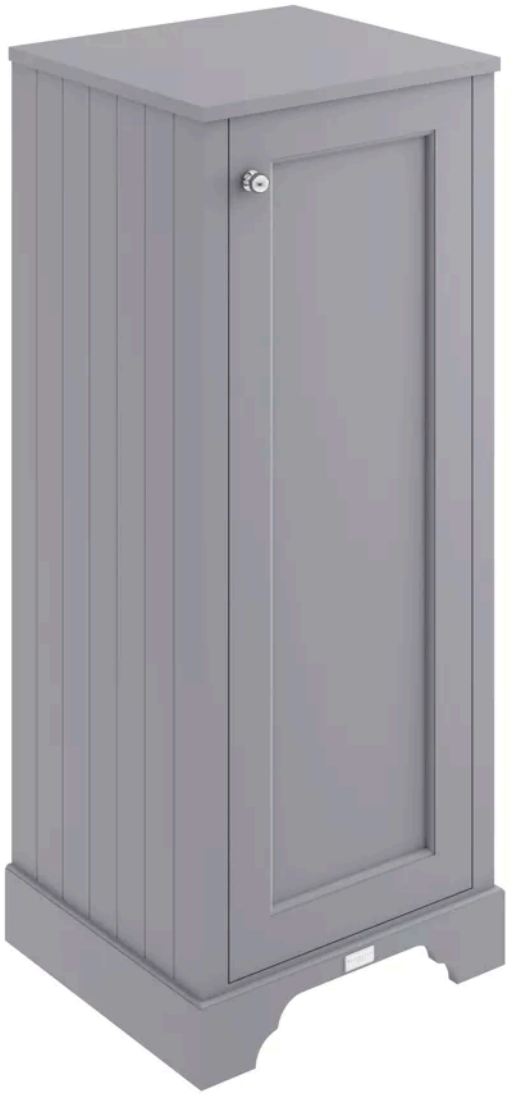

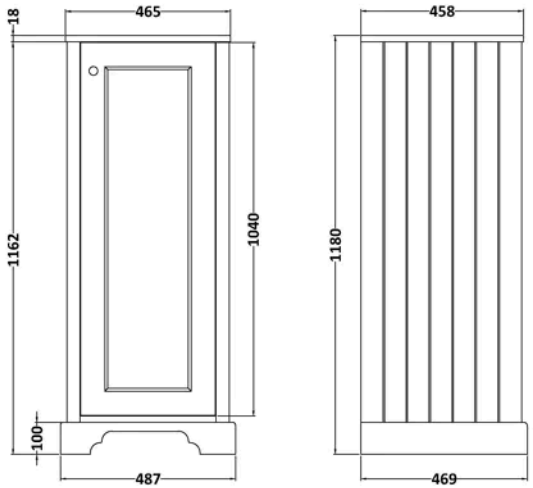

Product Dimensions

Product	1180 x 487 x 469mm (H x W x D)
Packaged	1205 x 530 x 505mm (H x W x D)
Nett Weight	39.5 kg
Packaged Weight	40 kg

Product Details

Country of Origin	Ukraine
Product Material	Mfc Painted Matt
Colour/Finish	Plummett Grey
Mount Type	Floor
Style	Traditional
Handle Type	Knob
Construction Method	Cam & Wood Dowel
Ce Certified	Yes
Construction Type	Rigid
Fascia Finish	Mdf Painted Matt
Fsc Certified	Yes
Handle Material	Metal
Handles Included	Yes
Leg Set Included	No
Material Thickness	16 mm
No. Doors	1
No. Shelves	2
Number Of Shelves	2

© ROXOR Group