**Sales Code:** BAYF104DPG3GT

**Barcode:** 5056817797256

**Brand:** Bayswater

**Description:** Bayswater 1000mm Plummett Grey Angled 4 Door Floor Standing Cabinet With 3 Tap Hole Basin With Grey Marble Worktop



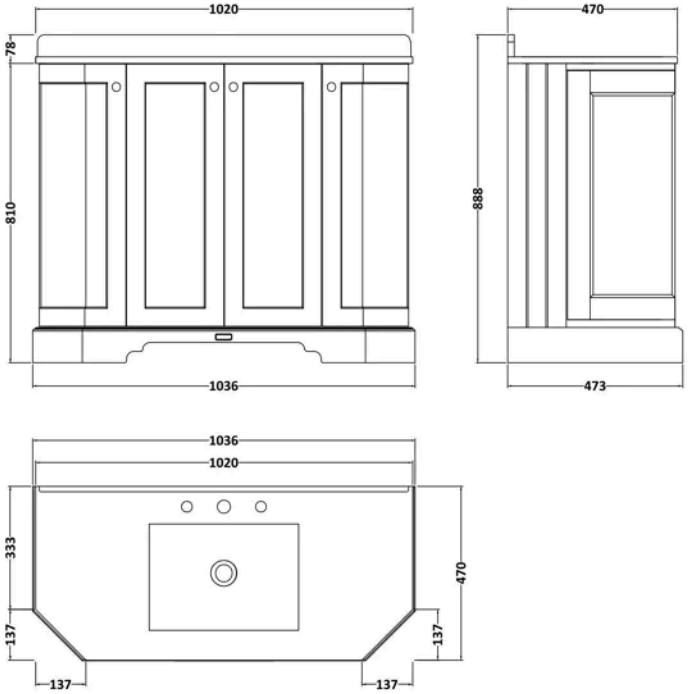


## Product Dimensions

| | |
|---|---|
| Product | 1078 x 2056 x 943mm (H x W x D) |
| Packaged | 1100 x 2155 x 1090mm (H x W x D) |
| Nett Weight | 63.5 kg |
| Packaged Weight | 63.5 kg |

## Product Details

| | |
|---|---|
| Country of Origin | Republic of Ireland |
| Product Material | Mfc Painted Matt,Vitreous China |
| Colour/Finish | Plummett Grey |
| Mount Type | Floor |
| Style | Traditional |
| Handle Type | Knob |
| Construction Method | Cam & Wood Dowel |
| Construction Type | Rigid |
| Fascia Finish | Mdf Vinyl Textured Woodgrain |
| Handles Included | Yes |
| Inner Bowl Height | 160 mm |
| Material Thickness | 18 mm |
| No. Doors | 4 |
| No. Of Tapholes | 3 |
| Number Of Bowls | 1 |
| Overflow Included | Yes |

© ROXOR Group

**Sales Code:** BAYC271 **Barcode:** 5056817726652 **Brand:** Bayswater **Description:** Bayswater 3 Tap Hole 1000mm Single Bowl Angled Grey Marble Top Basin



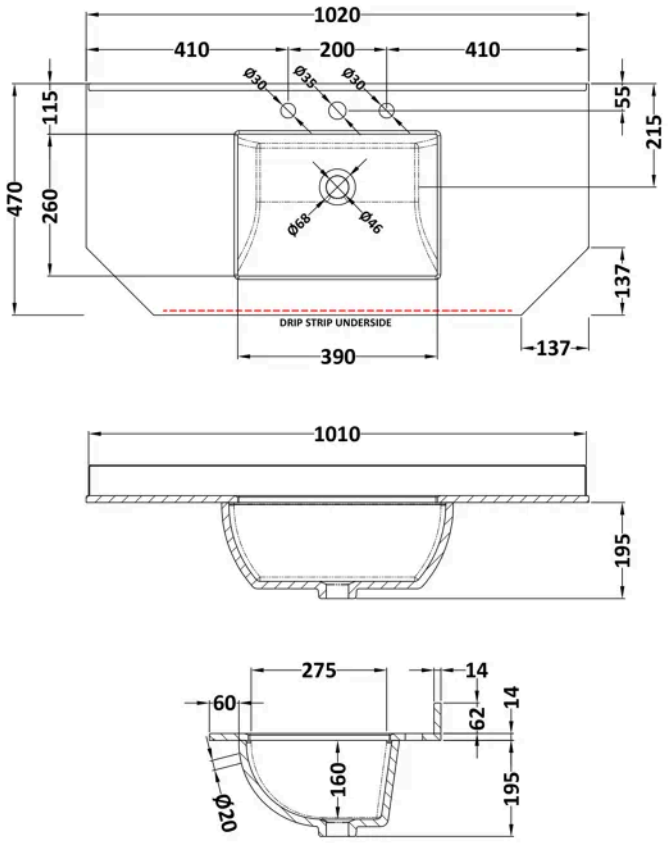


## Product Dimensions

| | |
|---|---|
| Product | 268 x 1020 x 470mm (H x W x D) |
| Packaged | 250 x 1100 x 580mm (H x W x D) |
| Nett Weight | 19.5 kg |
| Packaged Weight | 20 kg |

## Product Details

| | |
|---|---|
| Country of Origin | China |
| Product Material | Vitreous China |
| Colour/Finish | Grey |
| Style | Traditional |
| Inner Bowl Height | 160 mm |
| No. Of Tapholes | 3 |
| Number Of Bowls | 1 |
| Overflow Included | Yes |
| Tap Included | No |
| Waste Included | No |

© ROXOR Group

**Sales Code:** BAYF292 **Barcode:** 5056817723729 **Brand:** Bayswater **Description:** Bayswater 1000mm Plummett Grey 4 Door Angled Floor Standing Vanity Unit



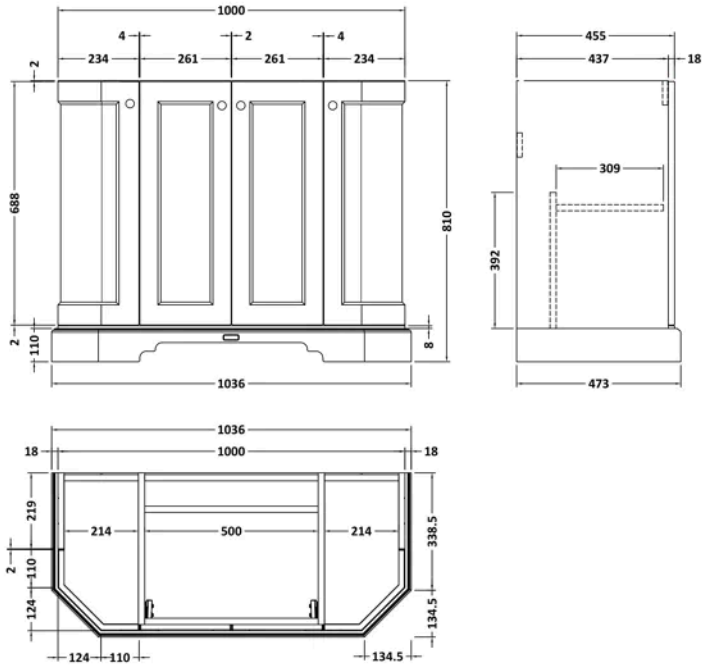


## Product Dimensions

| | |
|---|---|
| Product | 810 x 1036 x 473mm (H x W x D) |
| Packaged | 850 x 1055 x 510mm (H x W x D) |
| Nett Weight | 42.5 kg |
| Packaged Weight | 43.5 kg |

## Product Details

| | |
|---|---|
| Country of Origin | Republic of Ireland |
| Product Material | Mfc Painted Matt |
| Colour/Finish | Plummett Grey |
| Mount Type | Floor |
| Style | Traditional |
| Handle Type | Knob |
| Construction Method | Cam & Wood Dowel |
| Construction Type | Rigid |
| Fascia Finish | Mdf Vinyl Textured Woodgrain |
| Fsc Certified | Yes |
| Handles Included | Yes |
| Material Thickness | 18 mm |
| No. Doors | 4 |

© ROXOR Group