Sales Code: BAYF104DPG3BT

Barcode: 5056817797225

Brand: Bayswater

Description: Bayswater 1000mm Plummett Grey Angled 4 Door Floor Standing Cabinet With 3 Tap Hole Basin With Black Marble Worktop



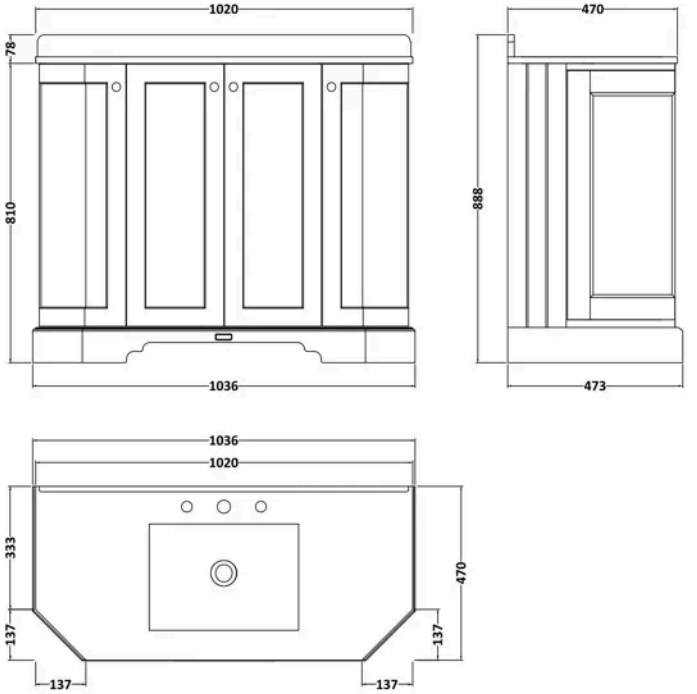

Product Dimensions

Product	1078 x 2056 x 943mm (H x W x D)
Packaged	1100 x 2155 x 1090mm (H x W x D)
Nett Weight	63.5 kg
Packaged Weight	63.5 kg

Product Details

Country of Origin	Republic of Ireland
Product Material	Mfc Painted Matt,Vitreous China
Colour/Finish	Plummett Grey
Mount Type	Floor
Style	Traditional
Handle Type	Knob
Construction Method	Cam & Wood Dowel
Construction Type	Rigid
Fascia Finish	Mdf Vinyl Textured Woodgrain
Handles Included	Yes
Inner Bowl Height	160 mm
Material Thickness	18 mm
No. Doors	4
No. Of Tapholes	3
Number Of Bowls	1
Overflow Included	Yes

© ROXOR Group

Sales Code: BAYC269 **Barcode:** 5056817726638 **Brand:** Bayswater **Description:** Bayswater 3 Tap Hole 1000mm Single Bowl Angled Black Marble Top Basin



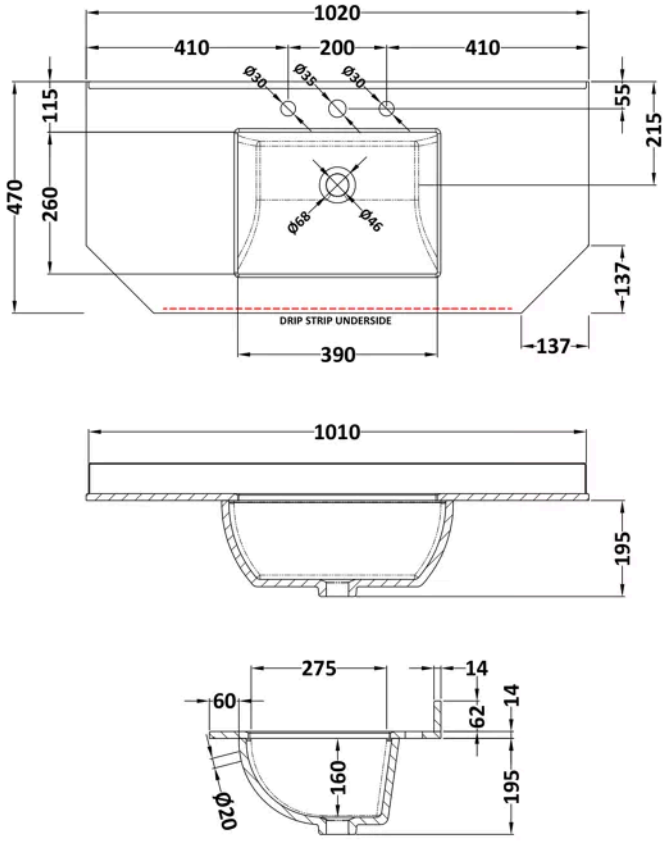

Product Dimensions

Product	268 x 1020 x 470mm (H x W x D)
Packaged	250 x 1100 x 580mm (H x W x D)
Nett Weight	19.5 kg
Packaged Weight	20 kg

Product Details

Country of Origin	China
Product Material	Vitreous China
Colour/Finish	Black
Style	Traditional
Inner Bowl Height	160 mm
No. Of Tapholes	3
Number Of Bowls	1
Overflow Included	Yes
Tap Included	No
Waste Included	No

© ROXOR Group

Sales Code: BAYF292 **Barcode:** 5056817723729 **Brand:** Bayswater **Description:** Bayswater 1000mm Plummett Grey 4 Door Angled Floor Standing Vanity Unit



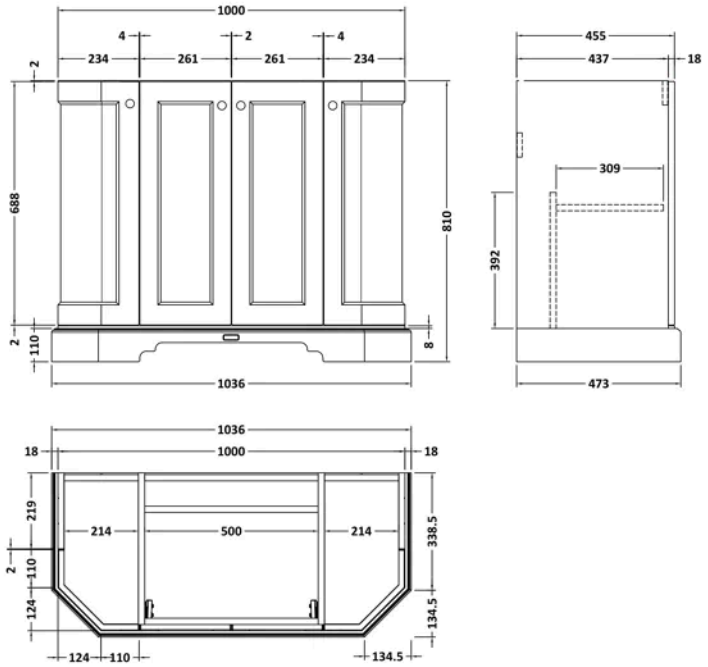

Product Dimensions

Product	810 x 1036 x 473mm (H x W x D)
Packaged	850 x 1055 x 510mm (H x W x D)
Nett Weight	42.5 kg
Packaged Weight	43.5 kg

Product Details

Country of Origin	Republic of Ireland
Product Material	Mfc Painted Matt
Colour/Finish	Plummett Grey
Mount Type	Floor
Style	Traditional
Handle Type	Knob
Construction Method	Cam & Wood Dowel
Construction Type	Rigid
Fascia Finish	Mdf Vinyl Textured Woodgrain
Fsc Certified	Yes
Handles Included	Yes
Material Thickness	18 mm
No. Doors	4

© ROXOR Group