**Sales Code:** BAYF103DHG3BT

**Barcode:** 5056817796600

**Brand:** Bayswater

**Description:** Bayswater 1000mm Hunter Green 3 Door Floor Standing Cabinet With 3 Tap Hole Basin With Black Worktop



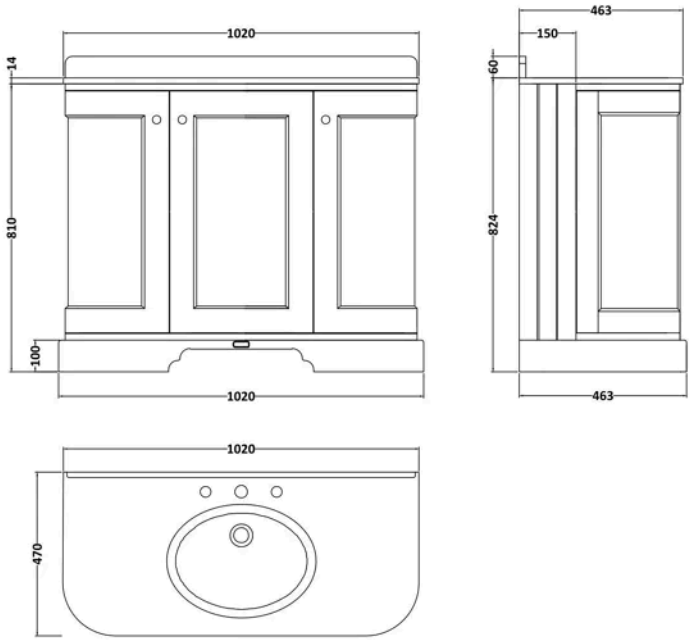


## Product Dimensions

| | |
|---|---|
| Product | 1078 x 2040 x 933mm (H x W x D) |
| Packaged | 1155 x 1950 x 1055mm (H x W x D) |
| Nett Weight | 68.5 kg |
| Packaged Weight | 68.5 kg |

## Product Details

| | |
|---|---|
| Country of Origin | Ukraine |
| Product Material | Mfc Painted Matt,Vitreous China |
| Colour/Finish | Hunter Green |
| Mount Type | Floor |
| Style | Traditional |
| Handle Type | Knob |
| Construction Method | Cam & Wood Dowel |
| Construction Type | Rigid |
| Fascia Finish | Mdf Painted Matt |
| Handles Included | Yes |
| Inner Bowl Height | 160 mm |
| Material Thickness | 16 mm |
| No. Doors | 3 |
| No. Of Tapholes | 3 |
| Number Of Bowls | 1 |
| Overflow Included | Yes |

© ROXOR Group

**Sales Code:** BAYC254 **Barcode:** 5056211825586 **Brand:** Bayswater **Description:** Bayswater 3 Tap Hole 1000mm Single Bowl Black Marble Top Basin With Radius



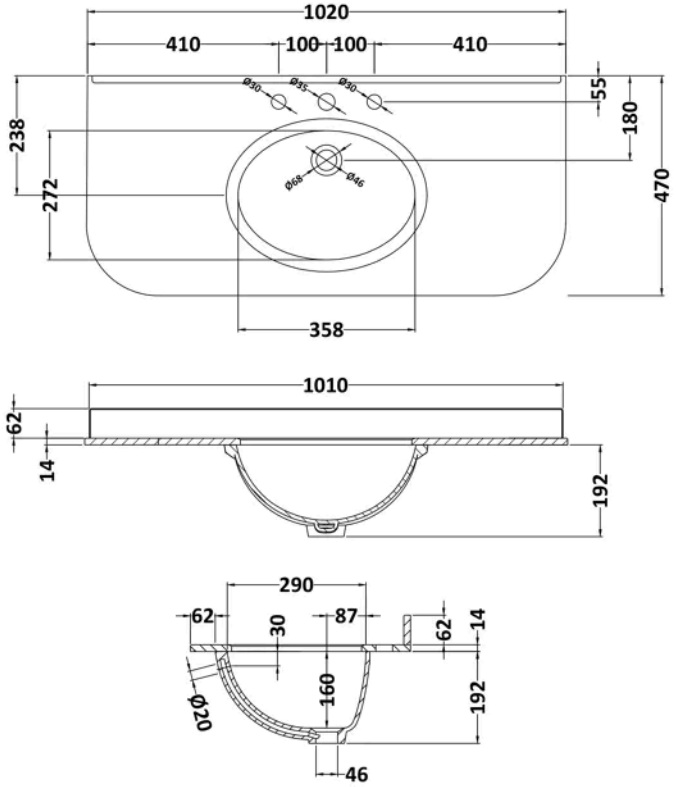


## Product Dimensions

| | |
|---|---|
| Product | 268 x 1020 x 470mm (H x W x D) |
| Packaged | 250 x 1100 x 580mm (H x W x D) |
| Nett Weight | 24.5 kg |
| Packaged Weight | 25 kg |

## Product Details

| | |
|---|---|
| Country of Origin | China |
| Product Material | Vitreous China |
| Colour/Finish | Black |
| Style | Traditional |
| Inner Bowl Height | 160 mm |
| No. Of Tapholes | 3 |
| Number Of Bowls | 1 |
| Overflow Cover Included | No |
| Overflow Included | Yes |
| Tap Included | No |
| Waste Included | No |

© ROXOR Group

**Sales Code:** BAYF861 **Barcode:** 5056817723453 **Brand:** Bayswater **Description:** Bayswater 1000mm Hunter Green 3 Door Curved Floor Standing Vanity Unit



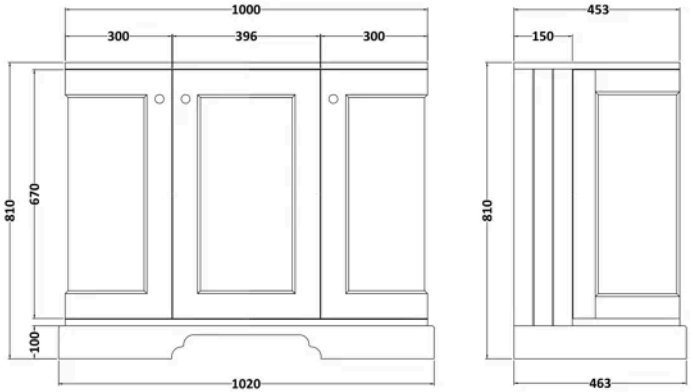


## Product Dimensions

| | |
|---|---|
| Product | 810 x 1020 x 463mm (H x W x D) |
| Packaged | 845 x 1060 x 505mm (H x W x D) |
| Nett Weight | 42.5 kg |
| Packaged Weight | 43.5 kg |

## Product Details

| | |
|---|---|
| Country of Origin | Ukraine |
| Product Material | Mfc Painted Matt |
| Colour/Finish | Hunter Green |
| Mount Type | Floor |
| Style | Traditional |
| Handle Type | Knob |
| Construction Method | Cam & Wood Dowel |
| Ce Certified | Yes |
| Construction Type | Rigid |
| Fascia Finish | Mdf Painted Matt |
| Fsc Certified | Yes |
| Handles Included | Yes |
| Material Thickness | 16 mm |
| No. Doors | 3 |
| Waste Shroud | No |

© ROXOR Group