Sales Code: BAYF103DHG1BT

Barcode: 5056817796679

Brand: Bayswater

Description: Bayswater 1000mm Hunter Green 3 Door Floor Standing Cabinet With 1 Tap Hole Basin With Black Worktop



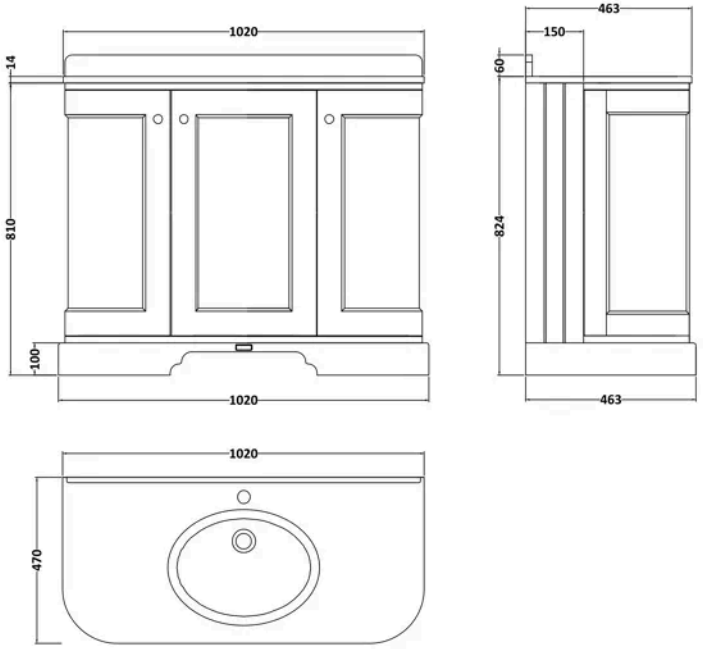

Product Dimensions

Product	1078 x 2040 x 933mm (H x W x D)
Packaged	1155 x 1950 x 1055mm (H x W x D)
Nett Weight	68.5 kg
Packaged Weight	68.5 kg

Product Details

Country of Origin	Ukraine
Product Material	Mfc Painted Matt,Vitreous China
Colour/Finish	Hunter Green
Mount Type	Floor
Style	Traditional
Handle Type	Knob
Construction Method	Cam & Wood Dowel
Construction Type	Rigid
Fascia Finish	Mdf Painted Matt
Handles Included	Yes
Inner Bowl Height	160 mm
Material Thickness	16 mm
No. Doors	3
No. Of Tapholes	1
Number Of Bowls	1
Overflow Included	Yes

© ROXOR Group

Sales Code: BAYC251 **Barcode:** 5056211825555 **Brand:** Bayswater **Description:** Bayswater 1 Tap Hole 1000mm Single Bowl Black Marble Top Basin With Radius



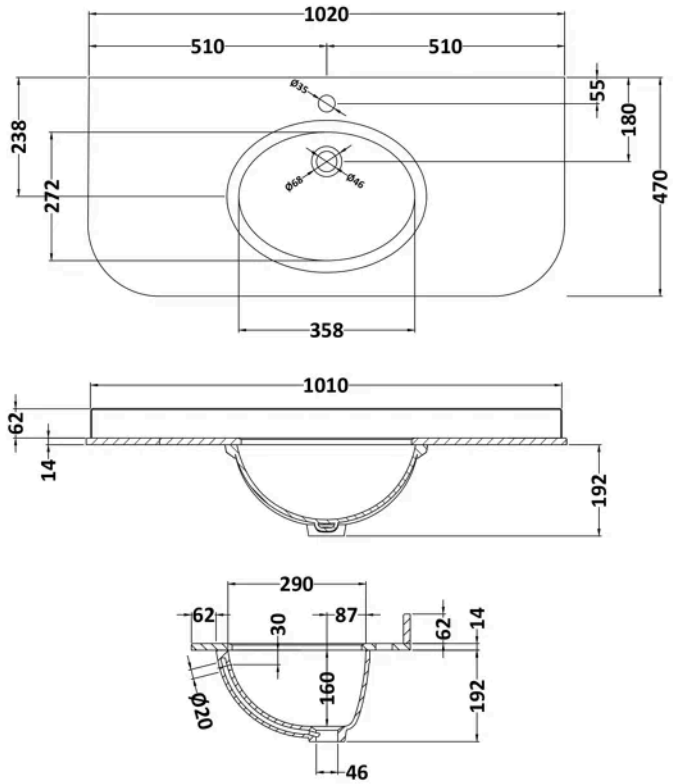

Product Dimensions

Product	268 x 1020 x 470mm (H x W x D)
Packaged	250 x 1100 x 580mm (H x W x D)
Nett Weight	24.5 kg
Packaged Weight	25 kg

Product Details

Country of Origin	China
Product Material	Vitreous China
Colour/Finish	Black
Style	Traditional
Inner Bowl Height	160 mm
No. Of Tapholes	1
Number Of Bowls	1
Overflow Cover Included	No
Overflow Included	Yes
Tap Included	No
Waste Included	No

© ROXOR Group

Sales Code: BAYF861 **Barcode:** 5056817723453 **Brand:** Bayswater **Description:** Bayswater 1000mm Hunter Green 3 Door Curved Floor Standing Vanity Unit



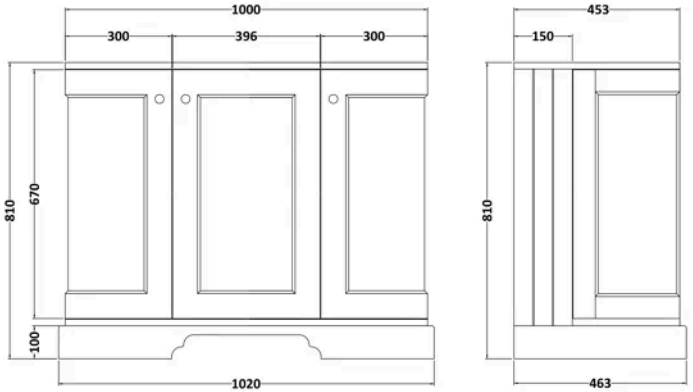

Product Dimensions

Product	810 x 1020 x 463mm (H x W x D)
Packaged	845 x 1060 x 505mm (H x W x D)
Nett Weight	42.5 kg
Packaged Weight	43.5 kg

Product Details

Country of Origin	Ukraine
Product Material	Mfc Painted Matt
Colour/Finish	Hunter Green
Mount Type	Floor
Style	Traditional
Handle Type	Knob
Construction Method	Cam & Wood Dowel
Ce Certified	Yes
Construction Type	Rigid
Fascia Finish	Mdf Painted Matt
Fsc Certified	Yes
Handles Included	Yes
Material Thickness	16 mm
No. Doors	3
Waste Shroud	No

© ROXOR Group