Sales Code: BAYF102DCB3B

Barcode: 5056817796228

Brand: Bayswater

Description: Bayswater 1000mm Matt Black 2 Door Floor Standing Cabinet With 3 Tap Hole Square Basin



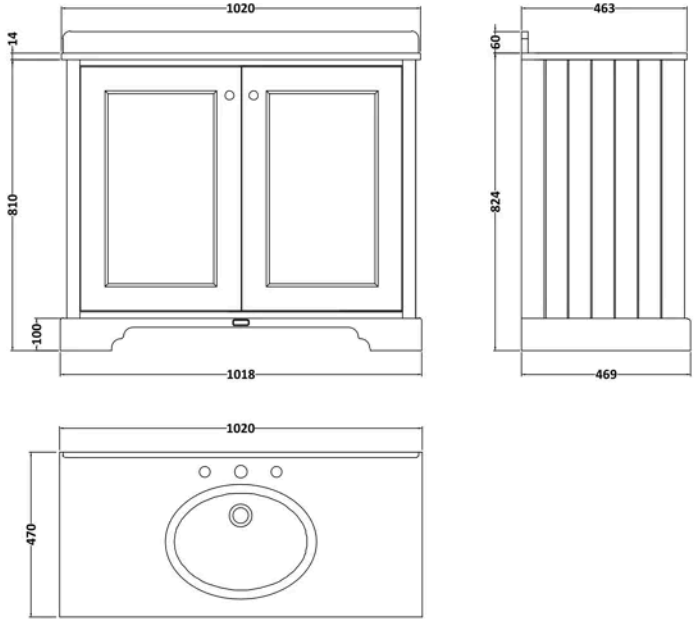

Product Dimensions

Product	1028 x 2038 x 939mm (H x W x D)
Packaged	1105 x 2080 x 985mm (H x W x D)
Nett Weight	70.5 kg
Packaged Weight	70.5 kg

Product Details

Country of Origin	Ukraine
Product Material	Mfc Painted Matt,Vitreous China
Colour/Finish	Matt Black
Mount Type	Floor
Style	Traditional
Handle Type	Knob
Construction Method	Cam & Wood Dowel
Construction Type	Rigid
Fascia Finish	Mdf Painted Matt
Handles Included	Yes
Inner Bowl Height	125 mm
Material Thickness	16 mm
No. Doors	2
No. Of Tapholes	3
Number Of Bowls	1
Overflow Included	Yes

© ROXOR Group

Sales Code: BAYC206 **Barcode:** 5056211829683 **Brand:** Bayswater **Description:** Bayswater 3 Tap Hole 1000mm Traditional Basin



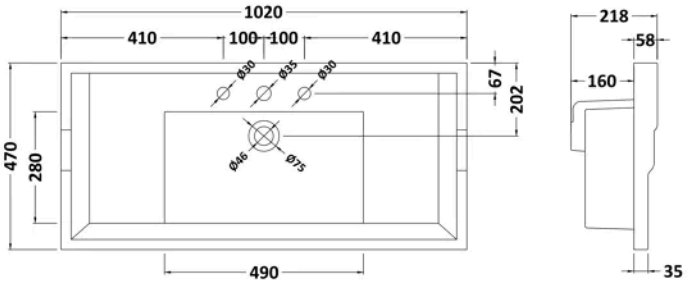

Product Dimensions

Product	218 x 1020 x 470mm (H x W x D)
Packaged	260 x 1020 x 480mm (H x W x D)
Nett Weight	26 kg
Packaged Weight	27 kg

Product Details

Country of Origin	China
Product Material	Vitreous China
Colour/Finish	White
Style	Traditional
Inner Bowl Height	125 mm
No. Of Tapholes	3
Number Of Bowls	1
Overflow Cover Included	No
Overflow Included	Yes
Tap Included	No
Waste Included	No

© ROXOR Group

Sales Code: BAYF458 **Barcode:** 5056462647173 **Brand:** Bayswater **Description:** Bayswater 1000mm Matt Black 2 Door Floor Standing Vanity Unit



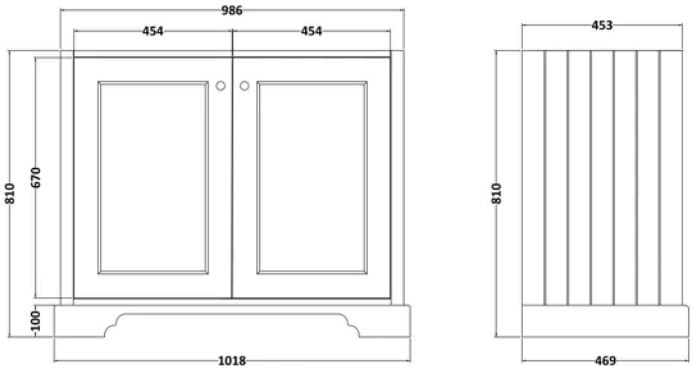

Product Dimensions

Product	810 x 1018 x 469mm (H x W x D)
Packaged	845 x 1060 x 505mm (H x W x D)
Nett Weight	42.5 kg
Packaged Weight	43.5 kg

Product Details

Country of Origin	Ukraine
Product Material	Mfc Painted Matt
Colour/Finish	Matt Black
Mount Type	Floor
Style	Traditional
Handle Type	Knob
Construction Method	Cam & Wood Dowel
Ce Certified	Yes
Construction Type	Rigid
Fascia Finish	Mdf Painted Matt
Fsc Certified	Yes
Handles Included	Yes
Material Thickness	16 mm
No. Doors	2

© ROXOR Group