Sales Code: BAYEQU769 **Barcode:** 5056883750049 **Brand:** Bayswater **Description:** Bayswater 900 x 760mm Chrome Offset Quadrant Shower Enclosure 6mm Glass



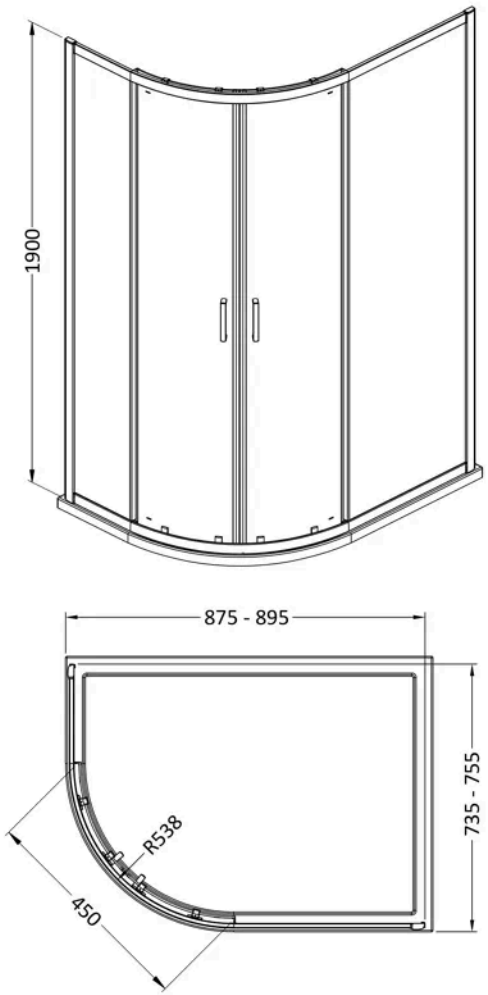

Product Dimensions

Product	1900 x 740 x 880mm (H x W x D)
Packaged	1955 x 425 x 120mm (H x W x D)
Nett Weight	41.1 kg
Packaged Weight	41.1 kg

Packaging Details

Box Qty	1

Product Details

Country of Origin	China
Product Material	Aluminium
Colour/Finish	Chrome
Style	Contemporary
Handle Type	Square T Shape
Fixings Included	Yes
Easy Clean	No
Adjustment Max	875/895
Adjustment Min	735/755
Ce Certified	Yes
Easy Fit	Yes
Enclosure Design	Framed
Entry Width	450 mm
Frame Finish	Chrome
Glass Thickness	6 mm
Handle Material	ABS
Handles Included	Yes
No. Doors	2
Radius	538 mm
Wheel Type	Dual Quick Release

© ROXOR Group