**Sales Code:** BAYEK190GM **Barcode:** 5064007015424 **Brand:** Bayswater **Description:** Bayswater Brushed Pewter 1900mm Profile Extension Kit



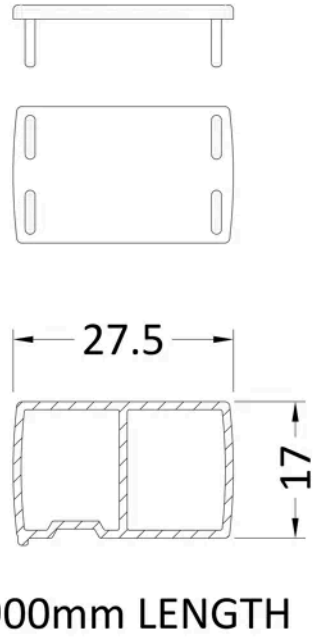


## Product Dimensions

| | |
|---|---|
| Product | 1900 x 17 x 27mm (H x W x D) |
| Packaged | 1960 x 60 x 60mm (H x W x D) |
| Nett Weight | 2.5 kg |
| Packaged Weight | 2.5 kg |

## Packaging Details

| | |
|---|---|
| Box Qty | 1 |
| Label Size (mm) | 50 x 100 |
| Label Colour | White |
| Label Qty | 1.0000 |

## Product Details

| | |
|---|---|
| Country of Origin | China |
| Product Material | Aluminium |
| Colour/Finish | Brushed Pewter |
| Style | Contemporary |

© ROXOR Group