Sales Code: BAYCWCCBS **Barcode:** 5056817741211 **Brand:** Bayswater **Description:** Bayswater Westcott Traditional Close Coupled Toilet With Black Seat



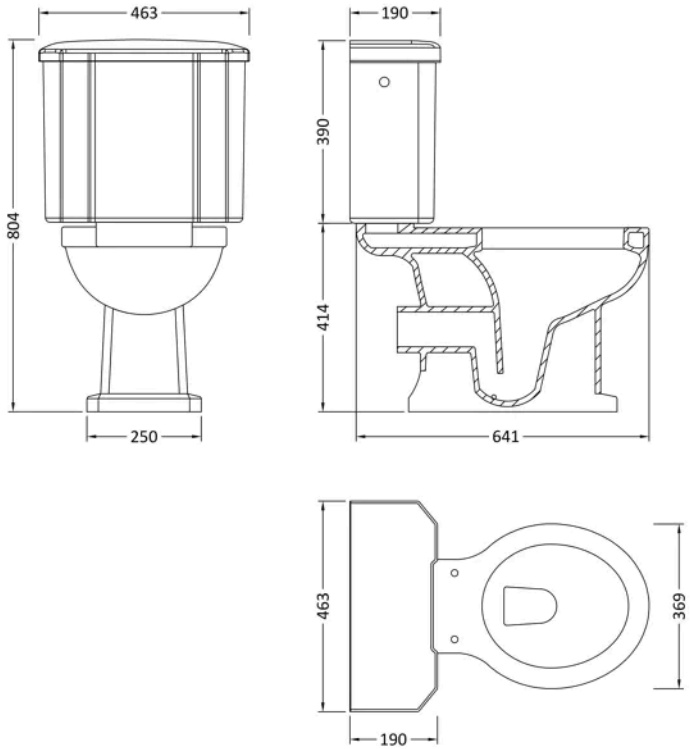

Product Dimensions

Product	810 x 460 x 680mm (H x W x D)
Packaged	959 x 992 x 1615mm (H x W x D)
Nett Weight	43 kg
Packaged Weight	43 kg

Product Details

Country of Origin	China
Product Material	Mdf Vinyl,Vitreous China
Colour/Finish	White
Style	Traditional
Ce Certified	Yes
Includes Seat	No
Pan Type	Comfort Height

© ROXOR Group

Sales Code: BAYC314 **Barcode:** 5056817724054 **Brand:** Bayswater **Description:** Bayswater Traditional Close Coupled Pan



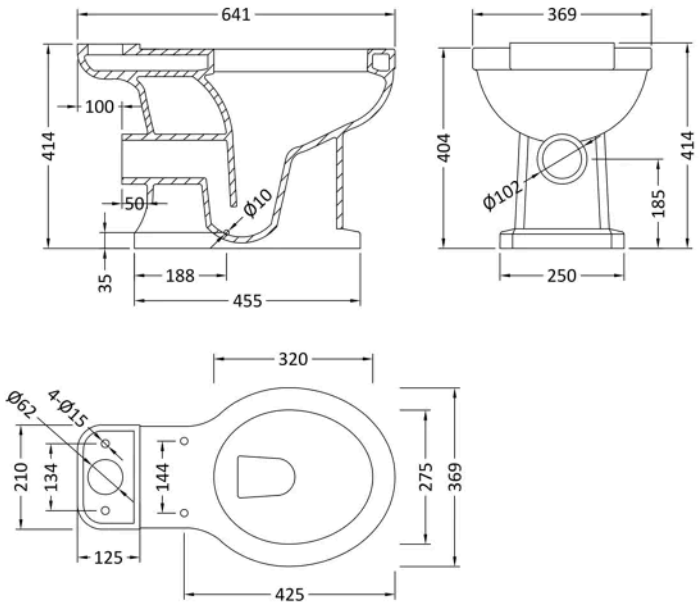

Product Dimensions

Product	410 x 365 x 640mm (H x W x D)
Packaged	482 x 392 x 650mm (H x W x D)
Nett Weight	20 kg
Packaged Weight	20 kg

Product Details

Country of Origin	China
Product Material	Vitreous China
Colour/Finish	White
Style	Traditional
Ce Certified	Yes
Includes Seat	No
Pan Type	Comfort Height

© ROXOR Group

Sales Code: BAYC315 **Barcode:** 5056817724061 **Brand:** Bayswater **Description:** Bayswater Traditional Close Coupled Cistern & Fittings



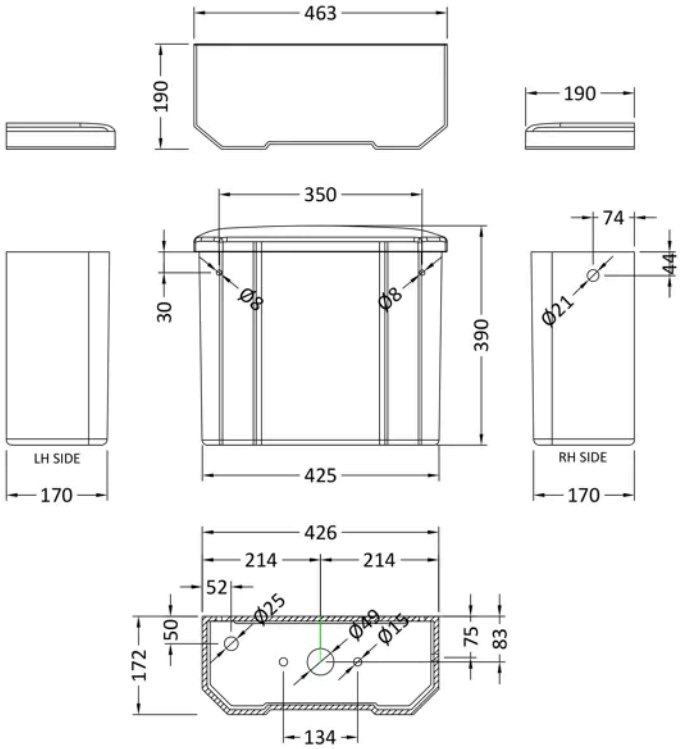

Product Dimensions

Product	387 x 460 x 190mm (H x W x D)
Packaged	447 x 205 x 470mm (H x W x D)
Nett Weight	15 kg
Packaged Weight	15 kg

Product Details

Country of Origin	China
Product Material	Vitreous China
Colour/Finish	White
Style	Traditional
Ce Certified	Yes
Cistern Fittings	Loose Single 6L
Cistern Lever Type	Ceramic / Chrome Plated
Flush Operating Type	Lever
Includes Seat	No
Pan Type	Comfort Height

© ROXOR Group

Sales Code: BAYTS002

Barcode: 5056817725020

Brand: Bayswater

Description: Bayswater Westcott Matt Black Round Soft Close Traditional Toilet Seat With Chrome Hinges



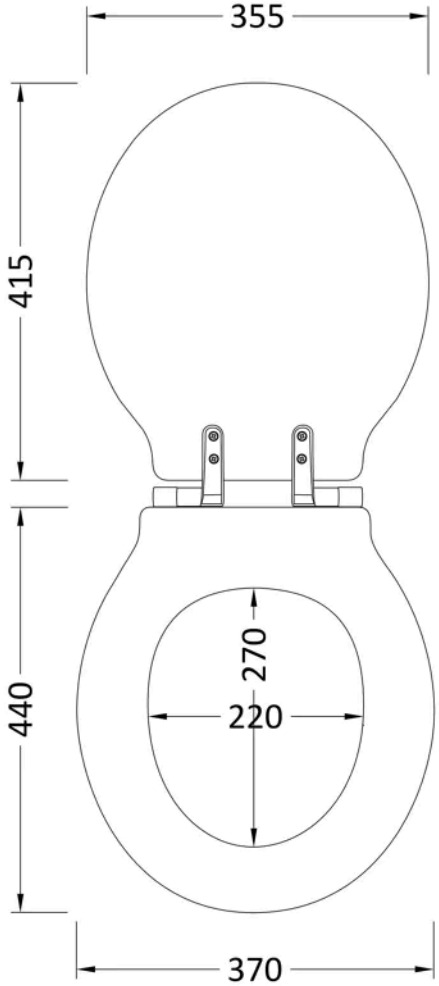

Product Dimensions

Product	30 x 370 x 440mm (H x W x D)
Packaged	30 x 395 x 495mm (H x W x D)
Nett Weight	8 kg
Packaged Weight	8 kg

Product Details

Country of Origin	China
Product Material	Mdf Vinyl
Colour/Finish	Matt Black
Style	Traditional
Toilet Seat Function	Soft Close
Toilet Seat Hinge Material	Stainless Steel
Toilet Seat Hinge Type	Bottom Fix
Toilet Seat Type	Round

© ROXOR Group