Sales Code: BAYCW640B1P **Barcode:** 5056817741228 **Brand:** Bayswater **Description:** Bayswater Westcott 1 Tap Hole 640mm Ceramic Basin & Pedestal



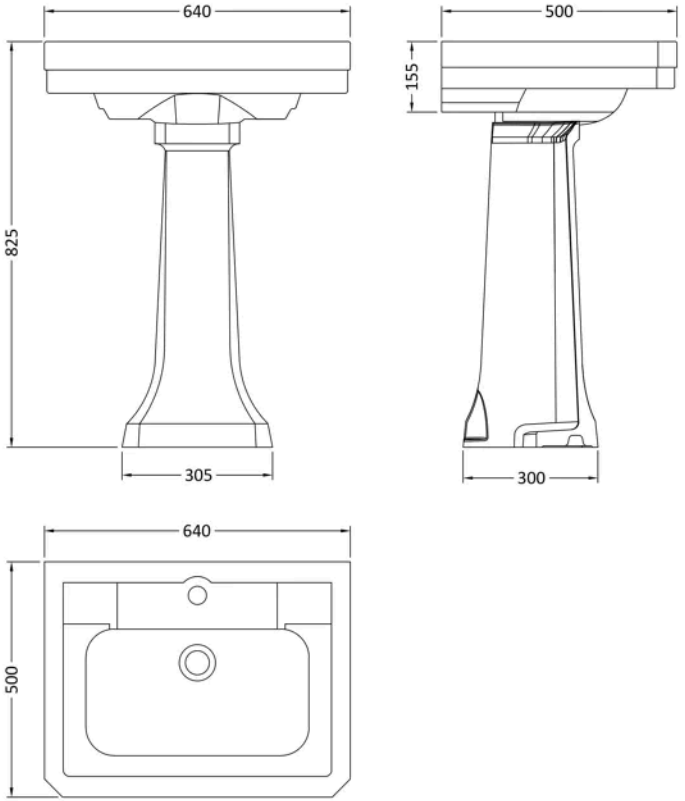

Product Dimensions

Product	825 x 640 x 500mm (H x W x D)
Packaged	910 x 965 x 815mm (H x W x D)
Nett Weight	31.3 kg
Packaged Weight	31.3 kg

Product Details

Country of Origin	China
Product Material	Vitreous China
Colour/Finish	White
Mount Type	Floor
Style	Traditional
Bottle Trap Included	No
Ce Certified	Yes
Inner Bowl Height	140 mm
No. Of Tapholes	1
Number Of Bowls	1
Overflow Cover Included	Yes
Overflow Included	Yes
Tap Included	No
Waste Included	No

© ROXOR Group

Sales Code: BAYC303 **Barcode:** 5056817724078 **Brand:** Bayswater **Description:** Bayswater 1 Tap Hole 640mm Ceramic Basin & Pedestal



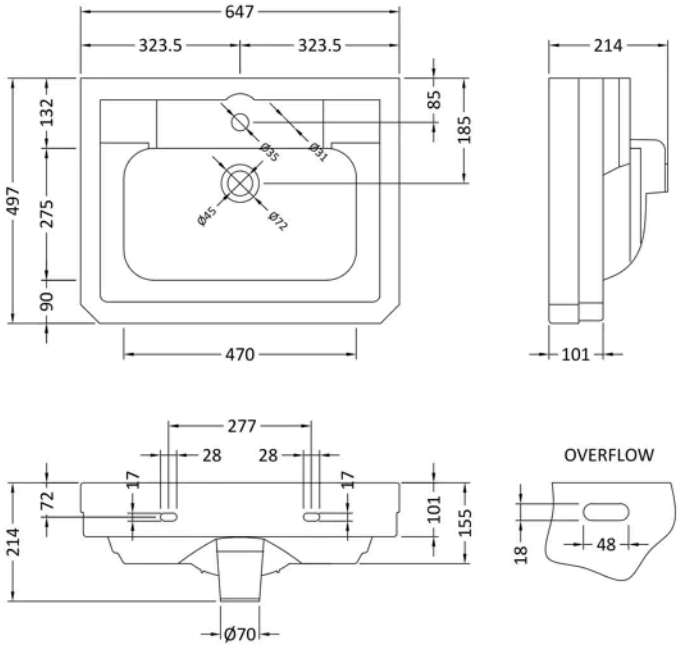

Product Dimensions

Product	220 x 640 x 500mm (H x W x D)
Packaged	220 x 650 x 500mm (H x W x D)
Nett Weight	17.9 kg
Packaged Weight	18.4 kg

Product Details

Country of Origin	China
Product Material	Vitreous China
Colour/Finish	White
Style	Traditional
Bottle Trap Included	No
Ce Certified	Yes
Inner Bowl Height	140 mm
No. Of Tapholes	1
Number Of Bowls	1
Overflow Cover Included	Yes
Overflow Included	Yes
Tap Included	No
Waste Included	No

© ROXOR Group

Sales Code: BAYC309 **Barcode:** 5056817724108 **Brand:** Bayswater **Description:** Bayswater Westcott White Traditional Full Pedestal for use with 640mm Basin



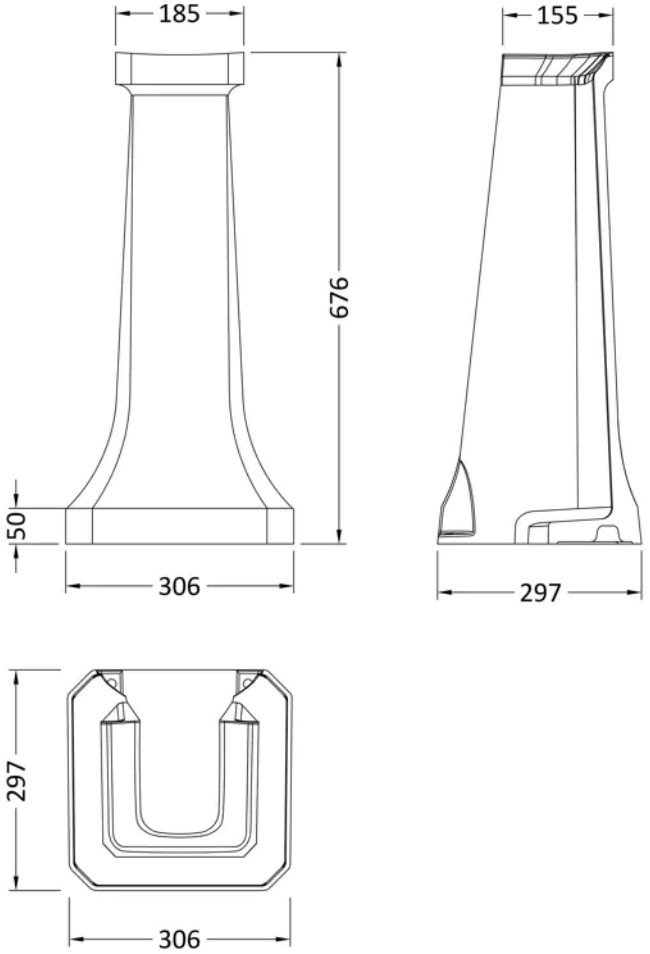

Product Dimensions

Product	676 x 306 x 297mm (H x W x D)
Packaged	690 x 315 x 315mm (H x W x D)
Nett Weight	12.4 kg
Packaged Weight	12.9 kg

Product Details

Country of Origin	China
Product Material	Vitreous China
Colour/Finish	White
Mount Type	Floor
Style	Traditional
Ce Certified	Yes

© ROXOR Group