Sales Code: BAYCW540B3P **Barcode:** 5056817741259 **Brand:** Bayswater **Description:** Bayswater Westcott 3 Tap Hole 540mm Ceramic Basin & Pedestal



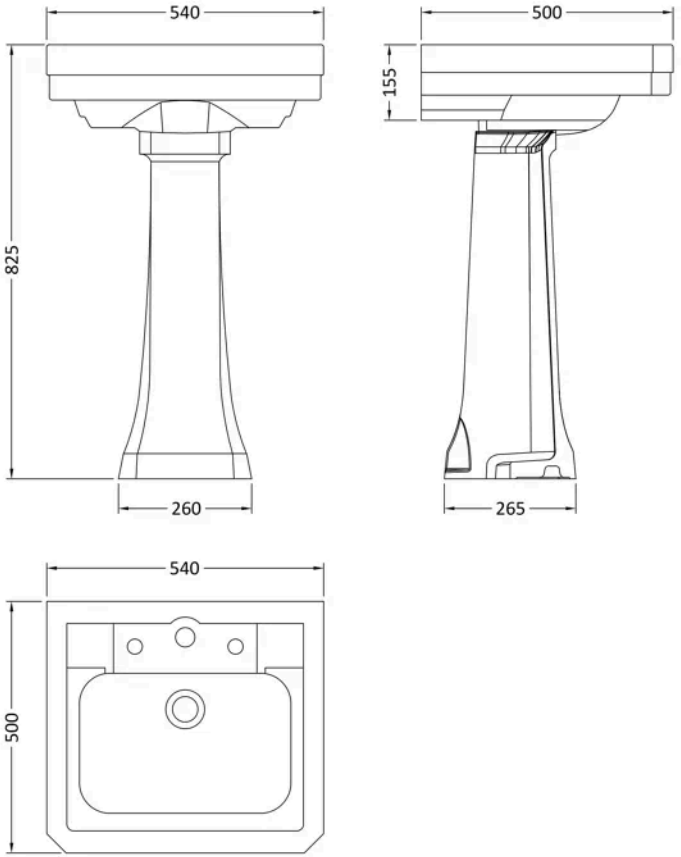

Product Dimensions

Product	825 x 540 x 500mm (H x W x D)
Packaged	905 x 805 x 760mm (H x W x D)
Nett Weight	27.4 kg
Packaged Weight	27.4 kg

Product Details

Country of Origin	China
Product Material	Vitreous China
Colour/Finish	White
Mount Type	Floor
Style	Traditional
Bottle Trap Included	No
Ce Certified	Yes
Inner Bowl Height	140 mm
No. Of Tapholes	3
Number Of Bowls	1
Overflow Cover Included	Yes
Overflow Included	Yes
Tap Included	No
Waste Included	No

© ROXOR Group

Sales Code: BAYC302 **Barcode:** 5056817724146 **Brand:** Bayswater **Description:** Bayswater Westcott White Traditional Full Pedestal for use with 540mm Basin



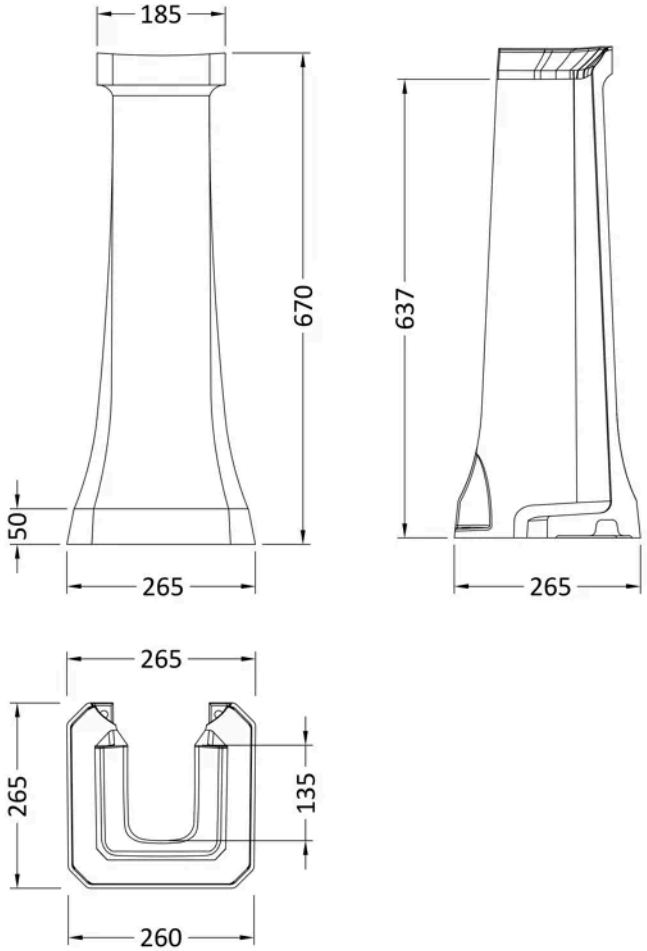

Product Dimensions

Product	690 x 315 x 315mm (H x W x D)
Packaged	685 x 265 x 260mm (H x W x D)
Nett Weight	12.4 kg
Packaged Weight	12.9 kg

Product Details

Country of Origin	China
Product Material	Ceramic
Colour/Finish	White
Mount Type	Floor
Style	Traditional
Ce Certified	Yes

© ROXOR Group

Sales Code: BAYC306 **Barcode:** 5056817724139 **Brand:** Bayswater **Description:** Bayswater 3 Tap Hole 540mm Ceramic Basin & Pedestal



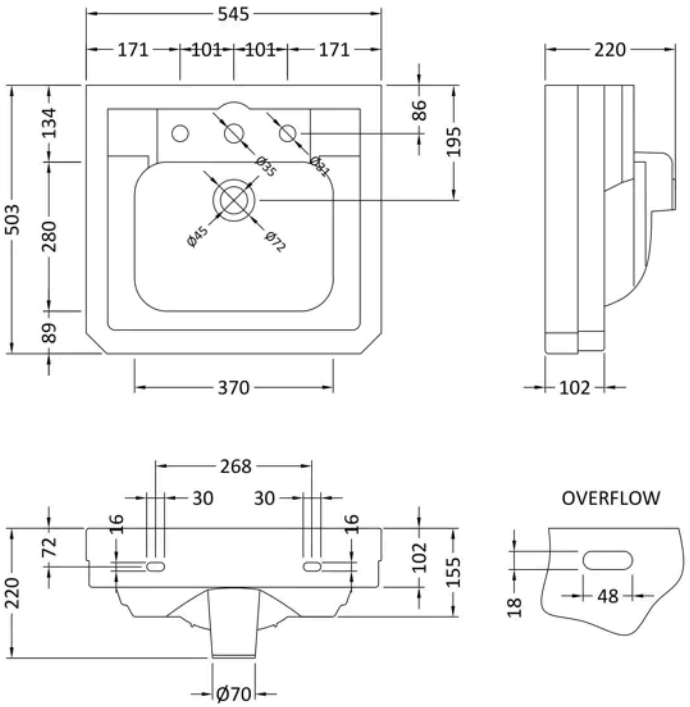

Product Dimensions

Product	220 x 545 x 503mm (H x W x D)
Packaged	220 x 540 x 500mm (H x W x D)
Nett Weight	14 kg
Packaged Weight	14.5 kg

Product Details

Country of Origin	China
Product Material	Vitreous China
Colour/Finish	White
Style	Traditional
Bottle Trap Included	No
Ce Certified	Yes
Inner Bowl Height	140 mm
No. Of Tapholes	3
Number Of Bowls	1
Overflow Cover Included	Yes
Overflow Included	Yes
Tap Included	No
Waste Included	No

© ROXOR Group