Sales Code: BAYCPCCHGS **Barcode:** 5056817741150 **Brand:** Bayswater **Description:** Bayswater Porchester Traditional Close Coupled Toilet With Seat



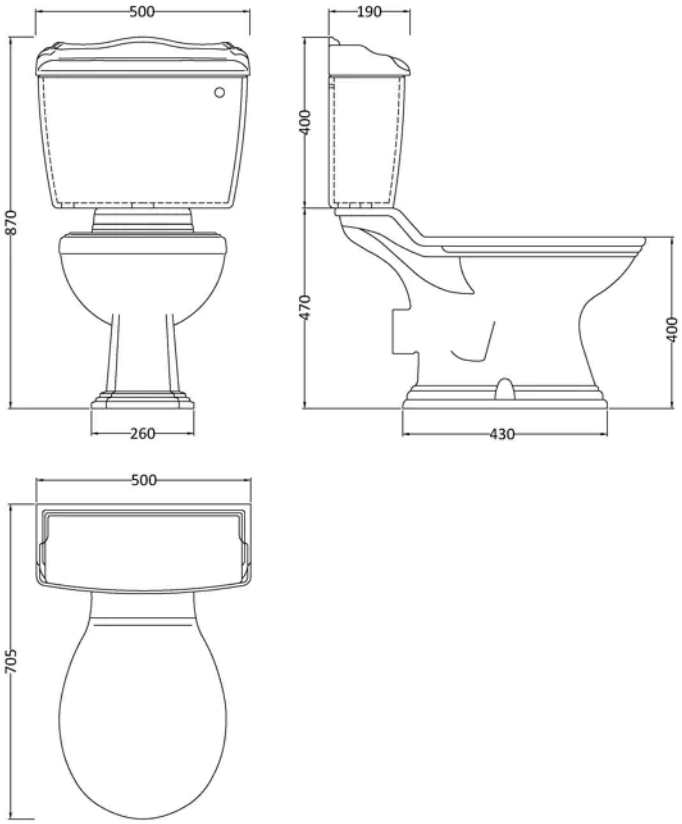

Product Dimensions

Product	845 x 515 x 710mm (H x W x D)
Packaged	925 x 1650 x 1070mm (H x W x D)
Nett Weight	41.6 kg
Packaged Weight	41.6 kg

Product Details

Country of Origin	China
Product Material	Mdf Paint,Vitreous China,Zinc Alloy
Colour/Finish	White
Style	Traditional
Ce Certified	Yes
Hinge Centres (Max)	186 mm
Hinge Centres (Min)	150 mm
Includes Seat	No
Pan Type	Open To Wall
Toilet Seat Function	Soft Close
Toilet Seat Hinge Type	Top Fix
Toilet Seat Type	Round

© ROXOR Group

Sales Code: BAYC106 **Barcode:** 5055275892411 **Brand:** Bayswater **Description:** Bayswater Porchester Traditional Close Coupled Pan



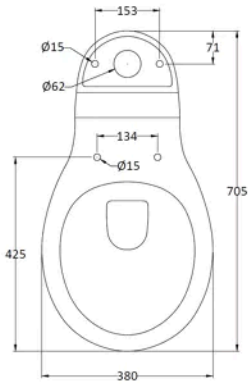

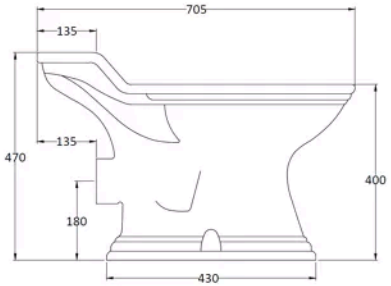

Product Dimensions

Product	470 x 380 x 705mm (H x W x D)
Packaged	470 x 725 x 390mm (H x W x D)
Nett Weight	20 kg
Packaged Weight	21.2 kg

Product Details

Country of Origin	China
Product Material	Vitreous China
Colour/Finish	White
Style	Traditional
Ce Certified	Yes
Includes Seat	No
Pan Type	Open To Wall

© ROXOR Group

Sales Code: BAYC107 **Barcode:** 5055275892428 **Brand:** Bayswater **Description:** Bayswater Porchester Cistern With Lever Close Coupled



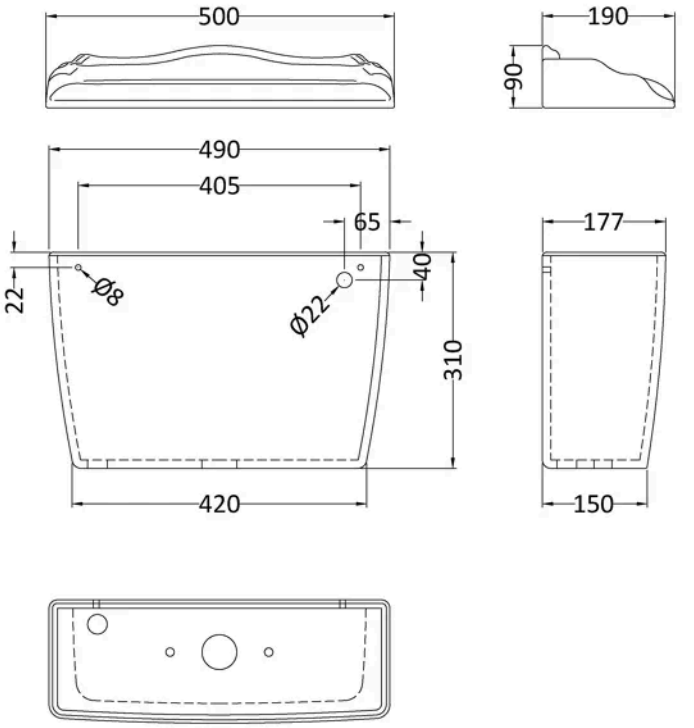

Product Dimensions

Product	310 x 500 x 190mm (H x W x D)
Packaged	385 x 510 x 200mm (H x W x D)
Nett Weight	15 kg
Packaged Weight	17 kg

Product Details

Country of Origin	China
Product Material	Vitreous China
Colour/Finish	White
Style	Traditional
Ce Certified	Yes
Includes Seat	No

© ROXOR Group

Sales Code: BAYF868

Barcode: 5056817723613

Brand: Bayswater

Description: Bayswater Porchester Hunter Green Round Wooden Soft Close Toilet Seat With Chrome Top Fix Hinge



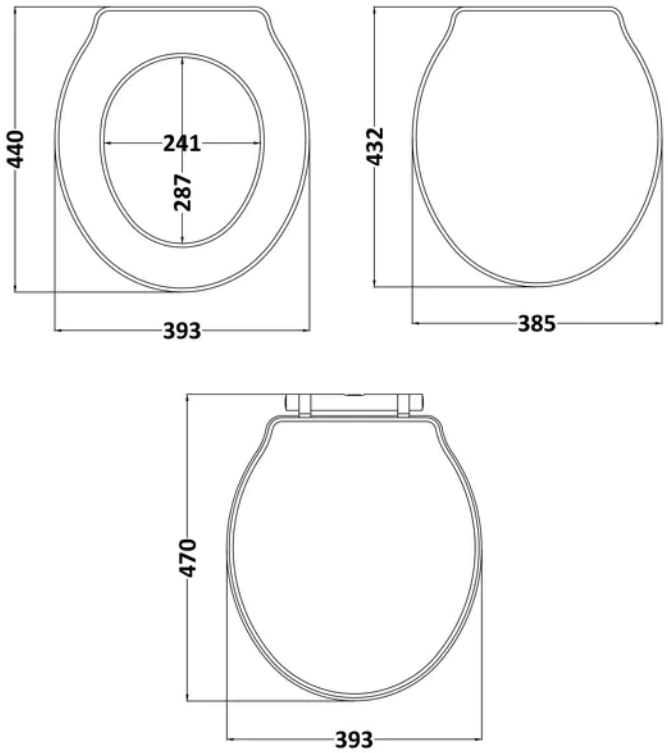

Product Dimensions

Product	60 x 393 x 470mm (H x W x D)
Packaged	70 x 395 x 475mm (H x W x D)
Nett Weight	3.2 kg
Packaged Weight	3.4 kg

Packaging Details

Label Size (mm)	50 x 110
Label Colour	White
Label Qty	2.0000

Product Details

Country of Origin	Ukraine
Product Material	Mdf Paint,Zinc Alloy
Colour/Finish	Hunter Green
Style	Traditional
Fixings Included	Yes
Hinge Centres (Max)	186 mm
Hinge Centres (Min)	150 mm
Toilet Seat Function	Soft Close
Toilet Seat Hinge Type	Top Fix
Toilet Seat Type	Round

© ROXOR Group