Sales Code: BAYCP600B1P **Barcode:** 5056817741068 **Brand:** Bayswater **Description:** Bayswater Porchester 1 Tap Hole 600mm Ceramic Basin & Pedestal



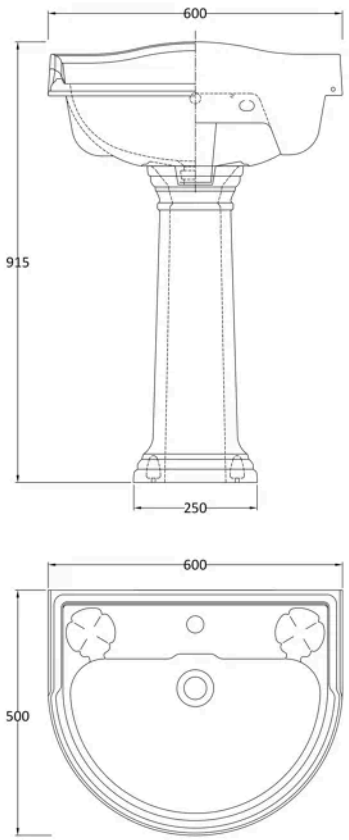

Product Dimensions

Product	935 x 600 x 500mm (H x W x D)
Packaged	427 x 900 x 1205mm (H x W x D)
Nett Weight	27.8 kg
Packaged Weight	27.8 kg

Product Details

Country of Origin	China
Product Material	Vitreous China
Colour/Finish	White
Mount Type	Floor
Style	Traditional
Bottle Trap Included	No
Ce Certified	Yes
No. Of Tapholes	1
Number Of Bowls	1
Overflow Cover Included	No
Overflow Included	Yes
Tap Included	No
Waste Included	No

© ROXOR Group

Sales Code: BAYC101 **Barcode:** 5055275892367 **Brand:** Bayswater **Description:** Bayswater Porchester 1 Tap Hole 600mm Ceramic Basin



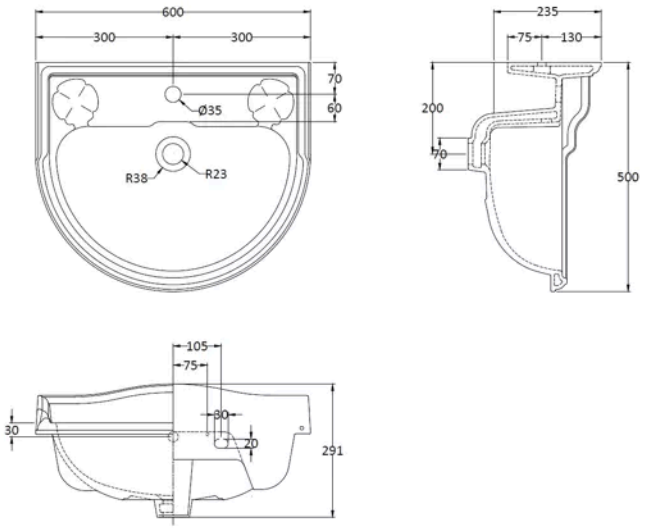

Product Dimensions

Product	291 x 600 x 500mm (H x W x D)
Packaged	510 x 610 x 310mm (H x W x D)
Nett Weight	17.6 kg
Packaged Weight	18.4 kg

Product Details

Country of Origin	China
Product Material	Vitreous China
Colour/Finish	White
Style	Traditional
Ce Certified	Yes
Inner Bowl Height	175 mm
No. Of Tapholes	1
Number Of Bowls	1
Overflow Cover Included	No
Overflow Included	Yes
Tap Included	No
Waste Included	No

© ROXOR Group

Sales Code: BAYC102 **Barcode:** 5055275892374 **Brand:** Bayswater **Description:** Bayswater Porchester White Traditional Full Pedestal



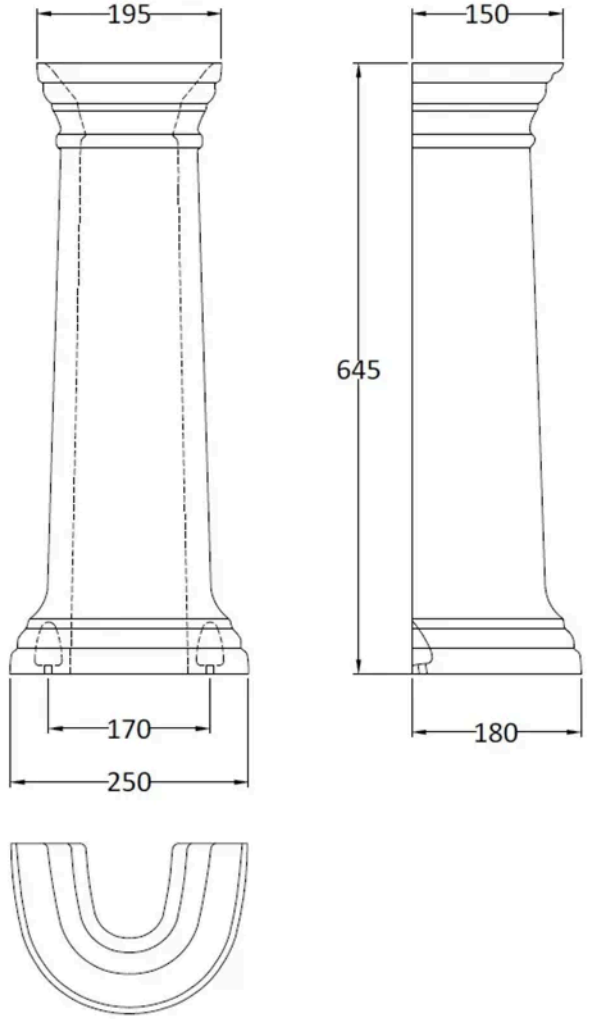

Product Dimensions

Product	645 x 250 x 180mm (H x W x D)
Packaged	290 x 660 x 190mm (H x W x D)
Nett Weight	8.9 kg
Packaged Weight	9.4 kg

Product Details

Country of Origin	China
Product Material	Vitreous China
Colour/Finish	White
Mount Type	Floor
Style	Traditional
Ce Certified	Yes

© ROXOR Group