Sales Code: BAYCP500B1P **Barcode:** 5056817741075 **Brand:** Bayswater **Description:** Bayswater Porchester 1 Tap Hole 500mm Ceramic Basin & Pedestal



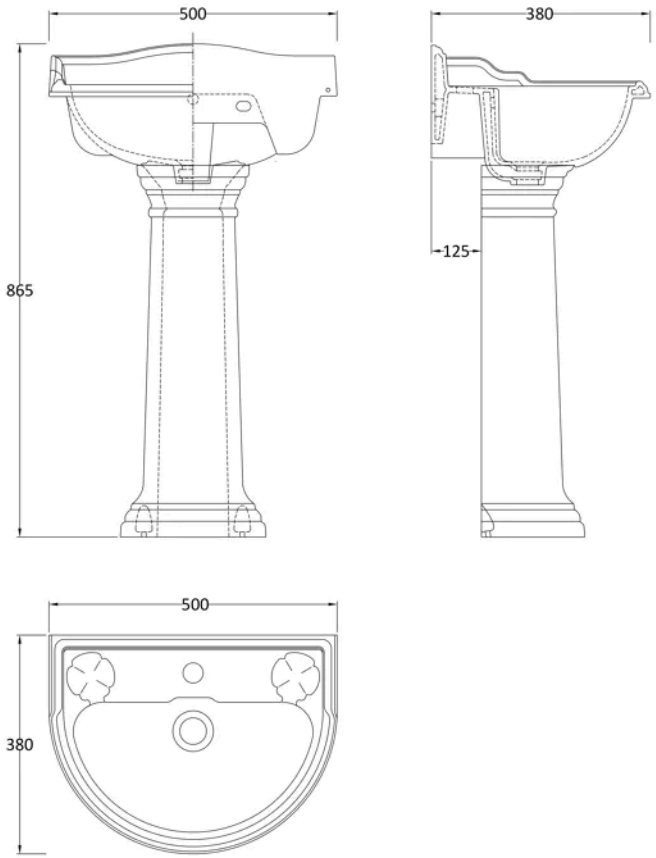

Product Dimensions

Product	855 x 500 x 400mm (H x W x D)
Packaged	427 x 900 x 1205mm (H x W x D)
Nett Weight	20.9 kg
Packaged Weight	20.9 kg

Product Details

Country of Origin	China
Product Material	Vitreous China
Colour/Finish	White
Mount Type	Floor
Style	Traditional
Bottle Trap Included	No
Ce Certified	Yes
No. Of Tapholes	1
Number Of Bowls	1
Overflow Cover Included	No
Overflow Included	Yes
Tap Included	No
Waste Included	No

© ROXOR Group

Sales Code: BAYC102 **Barcode:** 5055275892374 **Brand:** Bayswater **Description:** Bayswater Porchester White Traditional Full Pedestal



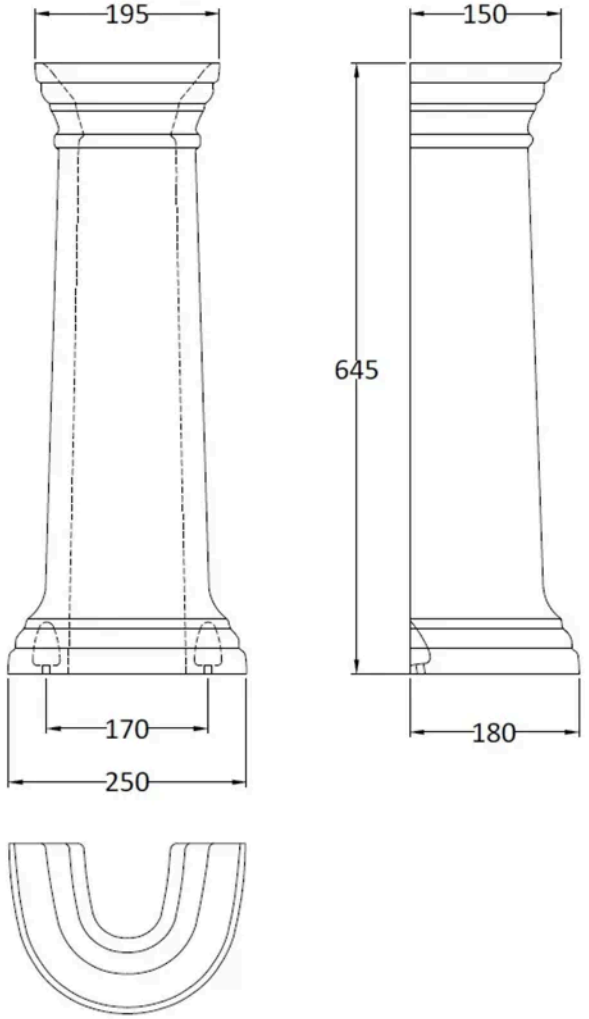

Product Dimensions

Product	645 x 250 x 180mm (H x W x D)
Packaged	290 x 660 x 190mm (H x W x D)
Nett Weight	8.9 kg
Packaged Weight	9.4 kg

Product Details

Country of Origin	China
Product Material	Vitreous China
Colour/Finish	White
Mount Type	Floor
Style	Traditional
Ce Certified	Yes

© ROXOR Group

Sales Code: BAYC103 **Barcode:** 5055275892381 **Brand:** Bayswater **Description:** Bayswater Porchester 1 Tap Hole 500mm Ceramic Basin



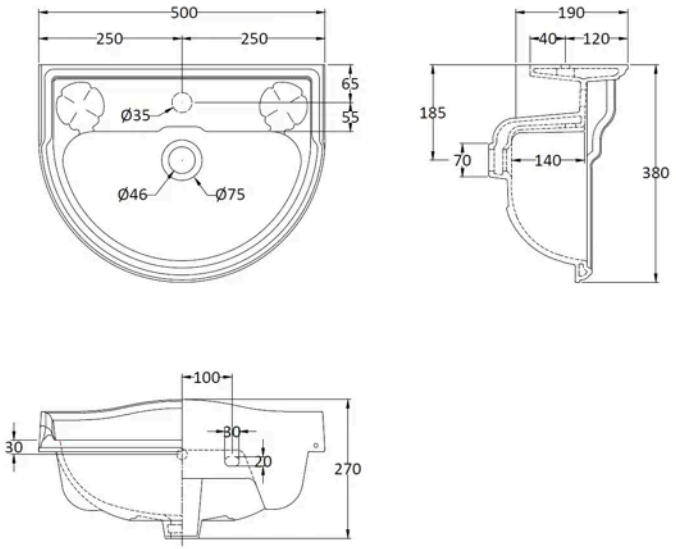

Product Dimensions

Product	270 x 500 x 380mm (H x W x D)
Packaged	390 x 510 x 270mm (H x W x D)
Nett Weight	11 kg
Packaged Weight	11.5 kg

Product Details

Country of Origin	China
Product Material	Vitreous China
Colour/Finish	White
Style	Traditional
Ce Certified	Yes
Inner Bowl Height	140 mm
No. Of Tapholes	1
Number Of Bowls	1
Overflow Cover Included	No
Overflow Included	Yes
Tap Included	No
Waste Included	No

© ROXOR Group