Sales Code: BAYCFWHWS **Barcode:** 5056817741051 **Brand:** Bayswater **Description:** Bayswater Fitzroy Traditional Wall Hung Pan Seat



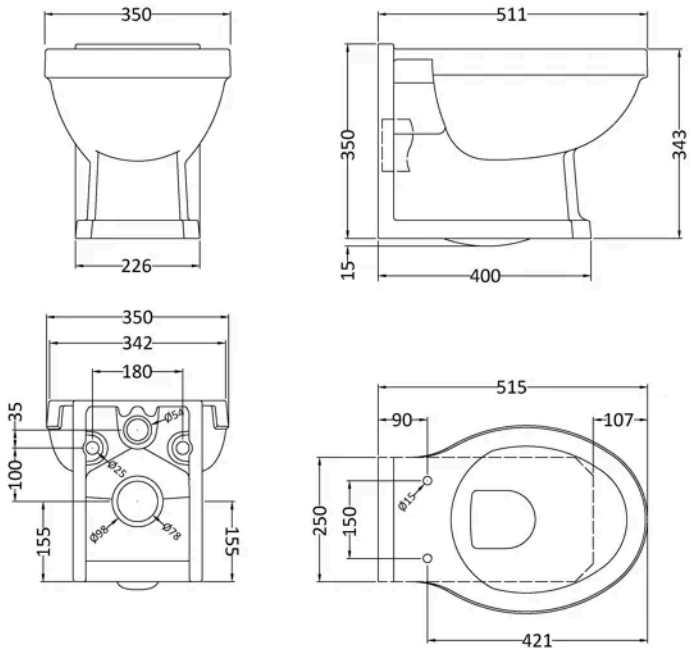

Product Dimensions

Product	360 x 352 x 518mm (H x W x D)
Packaged	445 x 740 x 995mm (H x W x D)
Nett Weight	24.5 kg
Packaged Weight	24.5 kg

Product Details

Country of Origin	China
Product Material	Hd Polyethylene,Mdf Paint,Vitreous China,Zinc Alloy
Colour/Finish	White
Style	Traditional
Ce Certified	Yes
Hinge Centres (Max)	165 mm
Hinge Centres (Min)	145 mm
Pan Type	Wall Hung
Toilet Seat Function	Standard
Toilet Seat Hinge Type	Bottom Fix
Toilet Seat Type	Round

© ROXOR Group

Sales Code: BAYC027 **Barcode:** 5056462670492 **Brand:** Bayswater **Description:** Bayswater Fitzroy Traditional Wall Hung Pan



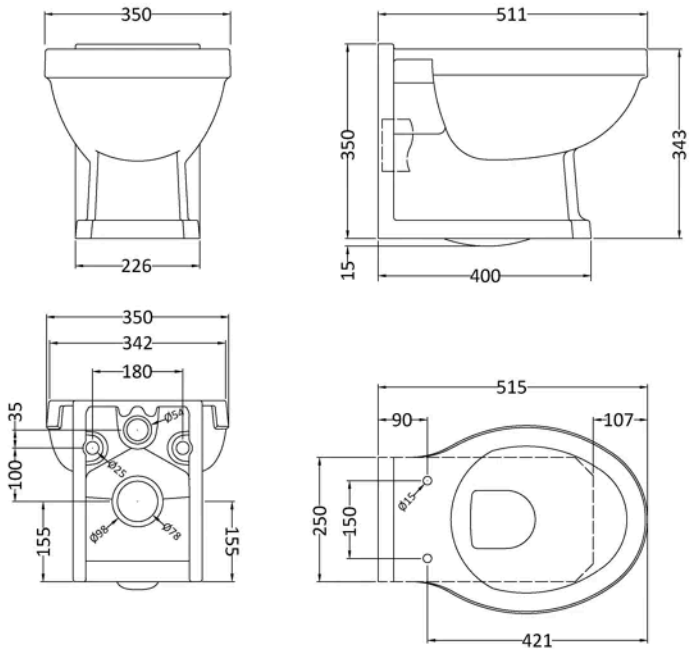

Product Dimensions

Product	365 x 350 x 515mm (H x W x D)
Packaged	490 x 380 x 540mm (H x W x D)
Nett Weight	21 kg
Packaged Weight	21.5 kg

Product Details

Country of Origin	China
Product Material	Vitreous China
Colour/Finish	White
Style	Traditional
Ce Certified	Yes
Includes Seat	No
Pan Type	Wall Hung

© ROXOR Group

Sales Code: BAYF169 **Barcode:** 5056211842668 **Brand:** Bayswater **Description:** Bayswater White Round Wooden Traditional Toilet Seat With Bottom Fix Hinge



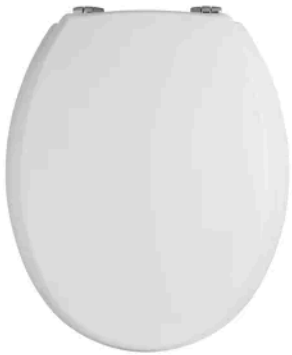

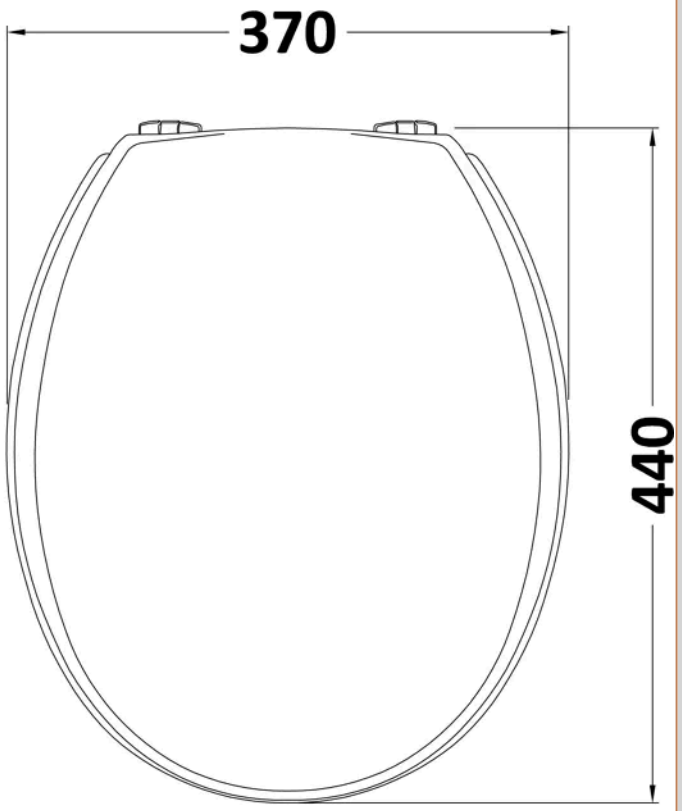

Product Dimensions

Product	60 x 370 x 410mm (H x W x D)
Packaged	70 x 380 x 470mm (H x W x D)
Outer Box	490mm (H)
Nett Weight	2.7 kg
Packaged Weight	3 kg

Packaging Details

Label Size (mm)	50 x 100
Label Colour	White
Label Qty	1.0000

Product Details

Country of Origin	China
Product Material	Mdf Paint,Zinc Alloy
Colour/Finish	White
Style	Traditional
Fixings Included	Yes
Ce Certified	No
Hinge Centres (Max)	165 mm
Hinge Centres (Min)	145 mm
Toilet Seat Function	Standard
Toilet Seat Hinge Type	Bottom Fix
Toilet Seat Type	Round

© ROXOR Group