Sales Code: BAYCFWHPWS **Barcode:** 5056817741044 **Brand:** Bayswater **Description:** Bayswater Fitzroy Traditional Wall Hung Pan With Pointing White Soft Close Seat



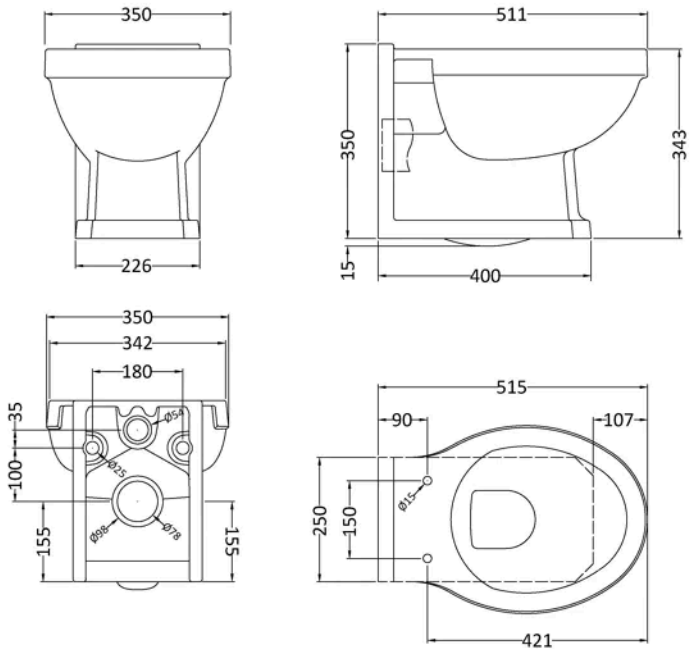

Product Dimensions

Product	360 x 352 x 518mm (H x W x D)
Packaged	475 x 755 x 995mm (H x W x D)
Nett Weight	24.8 kg
Packaged Weight	24.8 kg

Product Details

Country of Origin	China
Product Material	Hd Polyethylene,Mdf Paint,Vitreous China,Zinc Alloy
Colour/Finish	White
Style	Traditional
Ce Certified	Yes
Hinge Centres (Max)	186 mm
Hinge Centres (Min)	150 mm
Pan Type	Wall Hung
Toilet Seat Function	Soft Close
Toilet Seat Hinge Type	Top Fix
Toilet Seat Type	Round

© ROXOR Group

Sales Code: BAYC027 **Barcode:** 5056462670492 **Brand:** Bayswater **Description:** Bayswater Fitzroy Traditional Wall Hung Pan



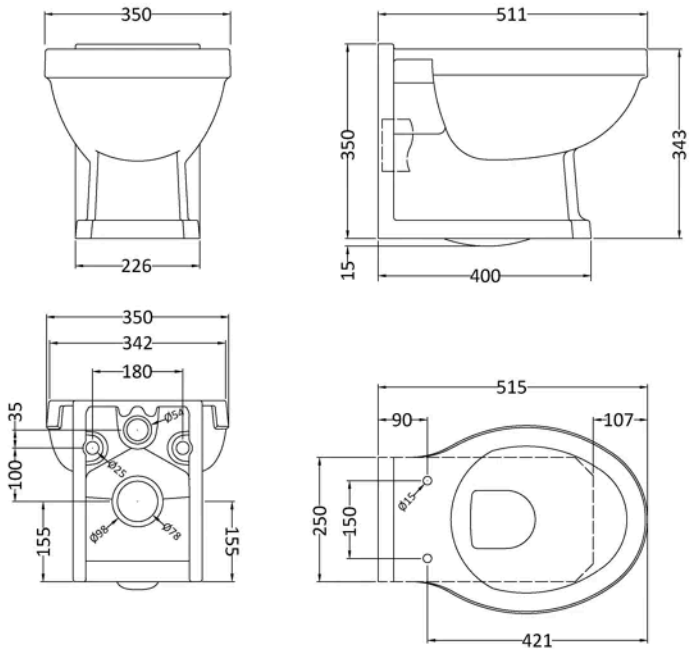

Product Dimensions

Product	365 x 350 x 515mm (H x W x D)
Packaged	490 x 380 x 540mm (H x W x D)
Nett Weight	21 kg
Packaged Weight	21.5 kg

Product Details

Country of Origin	China
Product Material	Vitreous China
Colour/Finish	White
Style	Traditional
Ce Certified	Yes
Includes Seat	No
Pan Type	Wall Hung

© ROXOR Group

Sales Code: BAYF150

Barcode: 5055275893296

Brand: Bayswater

Description: Bayswater Fitzroy Pointing White Round Wooden Soft Close Traditional Toilet Seat With Chrome Top Fix Hinge



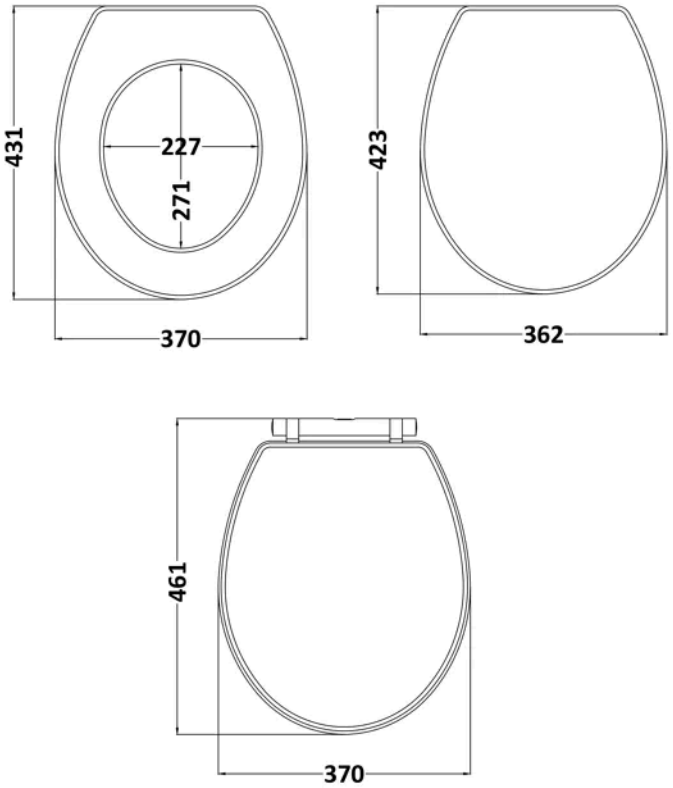

Product Dimensions

Product	60 x 370 x 461mm (H x W x D)
Packaged	70 x 395 x 475mm (H x W x D)
Nett Weight	3.1 kg
Packaged Weight	3.3 kg

Packaging Details

Label Size (mm)	50 x 100
Label Colour	White
Label Qty	2.0000

Product Details

Country of Origin	Ukraine
Product Material	Mdf Paint,Zinc Alloy
Colour/Finish	Pointing White
Style	Traditional
Fixings Included	Yes
Hinge Centres (Max)	186 mm
Hinge Centres (Min)	150 mm
Toilet Seat Function	Soft Close
Toilet Seat Hinge Type	Top Fix
Toilet Seat Type	Round

© ROXOR Group