Sales Code: BAYCFLLWSC

Barcode: 5056817740580

Brand: Bayswater

Description: Bayswater Fitzroy Traditional Comfort Height Low Level Toilet With White Soft Close Seat & Cistern



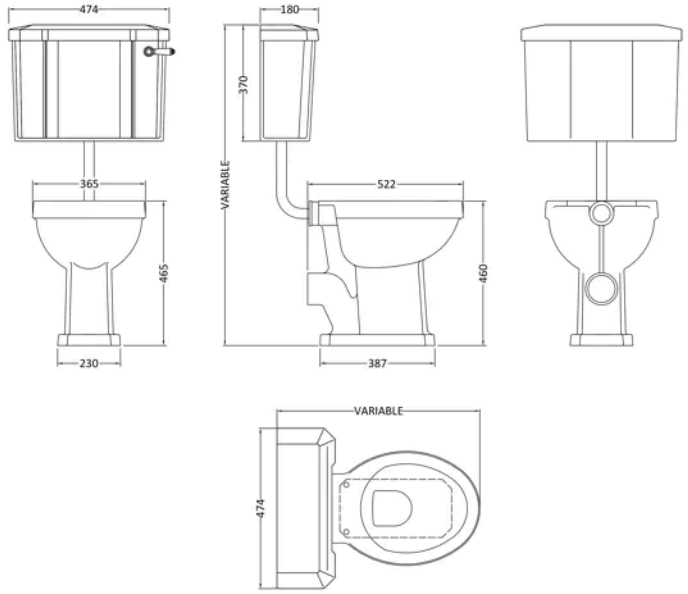

Product Dimensions

Product	1041 x 470 x 660mm (H x W x D)
Packaged	960 x 1254 x 1185mm (H x W x D)
Nett Weight	41.31 kg
Packaged Weight	41.31 kg

Product Details

Country of Origin	China
Product Material	Mdf Paint,Vitreous China,Zinc Alloy
Colour/Finish	White
Style	Traditional
Ce Certified	Yes
Hinge Centres (Max)	186 mm
Hinge Centres (Min)	145 mm
Pan Type	Comfort Height
Toilet Seat Function	Standard
Toilet Seat Hinge Type	Bottom Fix
Toilet Seat Type	Round

© ROXOR Group

Sales Code: BAYA017 **Barcode:** 5055275890400 **Brand:** Bayswater **Description:** Bayswater Chrome Low Level Flush Pipe



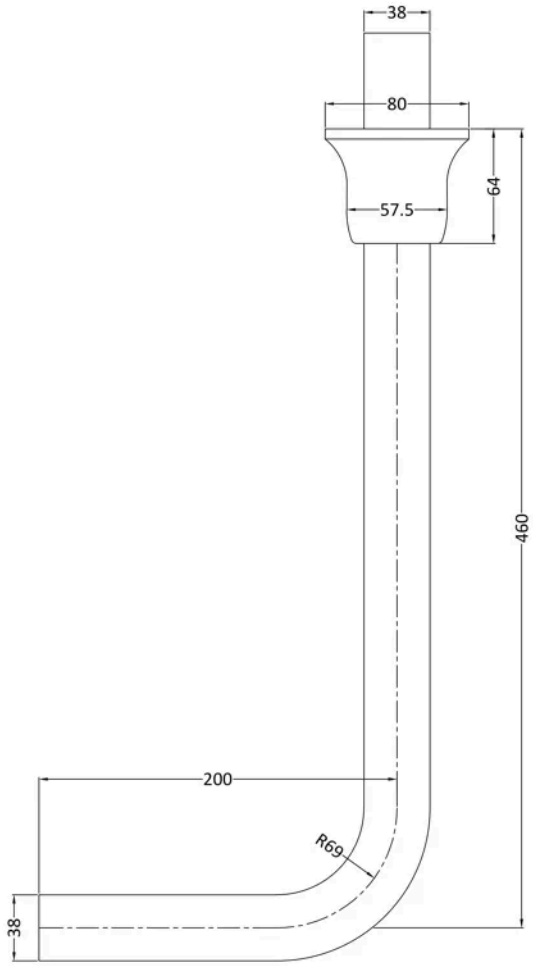

Product Dimensions

Product	480 x 81 x 220mm (H x W x D)
Packaged	75 x 200 x 540mm (H x W x D)
Nett Weight	0.7 kg
Packaged Weight	0.81 kg

Packaging Details

Box Qty	1
Label Size (mm)	50 x 100
Label Colour	White
Label Qty	2.0000

Product Details

Country of Origin	China
Product Material	Brass
Colour/Finish	Chrome
Style	Traditional
Fixings Included	No
Product Diameter	38 mm

© ROXOR Group

Sales Code: BAYC018 **Barcode:** 5055275892305 **Brand:** Bayswater **Description:** Bayswater Fitzroy Low Level Cistern With Ceramic Lever & Fittings



Technical Drawing Not Available

Product Dimensions

Product	370 x 474 x 180mm (H x W x D)
Packaged	390 x 494 x 200mm (H x W x D)
Nett Weight	14.5 kg
Packaged Weight	16.5 kg

Product Details

Country of Origin	China
Product Material	Vitreous China
Colour/Finish	White
Style	Traditional
Ce Certified	Yes
Includes Seat	No

© ROXOR Group

Sales Code: BAYC019 **Barcode:** 5055275892312 **Brand:** Bayswater **Description:** Bayswater Fitzroy Traditional Comfort Height Pan



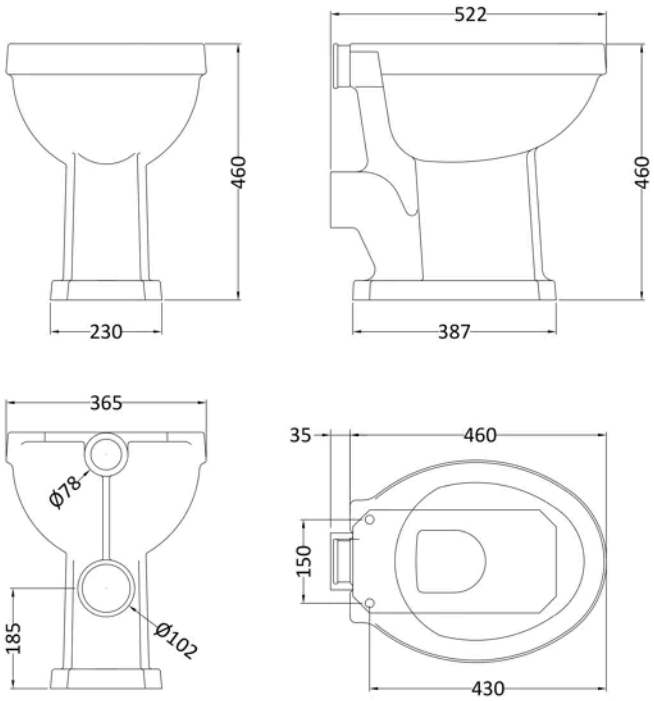

Product Dimensions

Product	466 x 370 x 515mm (H x W x D)
Packaged	500 x 380 x 515mm (H x W x D)
Nett Weight	20 kg
Packaged Weight	21 kg

Product Details

Country of Origin	China
Product Material	Vitreous China
Colour/Finish	White
Style	Traditional
Ce Certified	Yes
Includes Seat	No
Pan Type	Comfort Height

© ROXOR Group

Sales Code: BAYF169 **Barcode:** 5056211842668 **Brand:** Bayswater **Description:** Bayswater White Round Wooden Traditional Toilet Seat With Bottom Fix Hinge



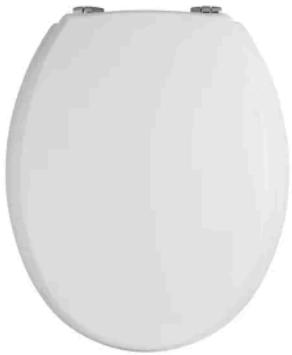

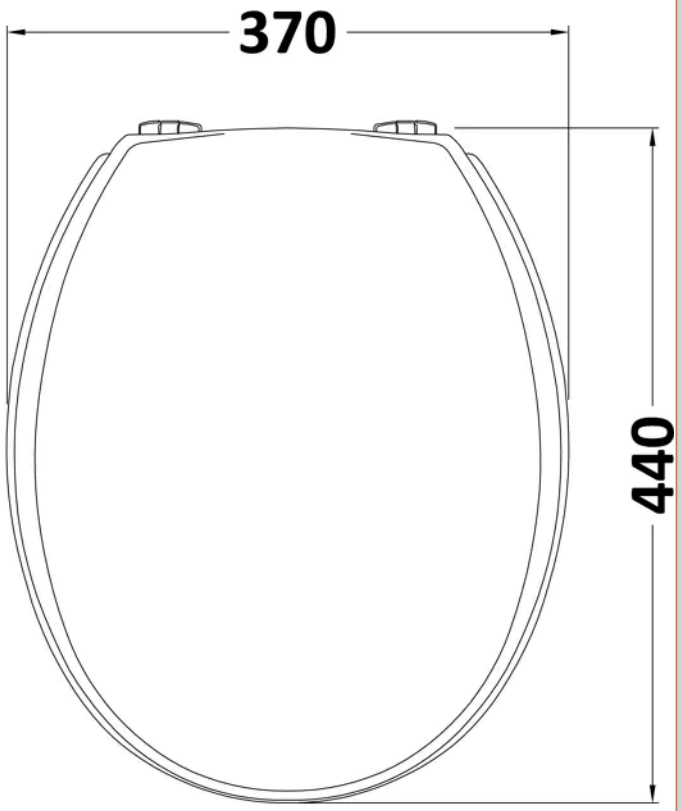

Product Dimensions

Product	60 x 370 x 410mm (H x W x D)
Packaged	70 x 380 x 470mm (H x W x D)
Outer Box	490mm (H)
Nett Weight	2.7 kg
Packaged Weight	3 kg

Packaging Details

Label Size (mm)	50 x 100
Label Colour	White
Label Qty	1.0000

Product Details

Country of Origin	China
Product Material	Mdf Paint,Zinc Alloy
Colour/Finish	White
Style	Traditional
Fixings Included	Yes
Ce Certified	No
Hinge Centres (Max)	165 mm
Hinge Centres (Min)	145 mm
Toilet Seat Function	Standard
Toilet Seat Hinge Type	Bottom Fix
Toilet Seat Type	Round

© ROXOR Group