Sales Code: BAYCFLLCBS

Barcode: 5056817740436

Brand: Bayswater

Description: Bayswater Fitzroy Traditional Low Level Toilet With Matt Black Soft Close Seat & Cistern



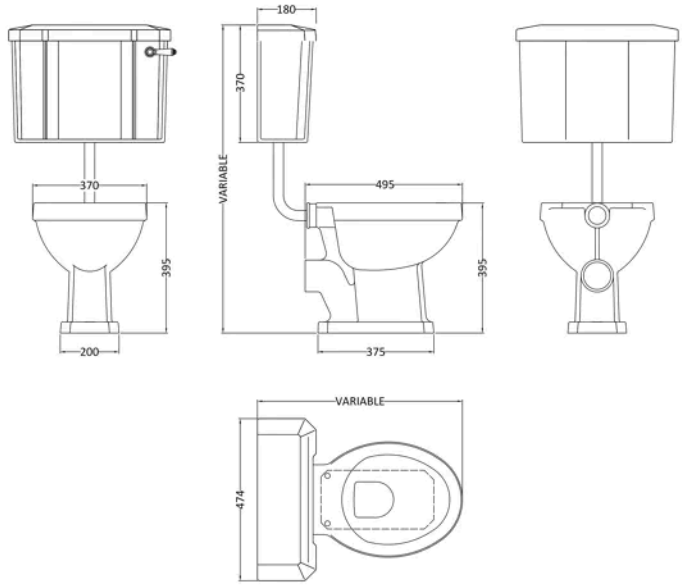

Product Dimensions

Product	985 x 474 x 660mm (H x W x D)
Packaged	855 x 1249 x 1205mm (H x W x D)
Nett Weight	37.21 kg
Packaged Weight	37.21 kg

Product Details

Country of Origin	China
Product Material	Mdf Paint,Vitreous China,Zinc Alloy
Colour/Finish	White
Style	Traditional
Ce Certified	Yes
Hinge Centres (Max)	186 mm
Hinge Centres (Min)	150 mm
Pan Type	Open To Wall
Toilet Seat Function	Soft Close
Toilet Seat Hinge Type	Top Fix
Toilet Seat Type	Round

© ROXOR Group

Sales Code: BAYA017 **Barcode:** 5055275890400 **Brand:** Bayswater **Description:** Bayswater Chrome Low Level Flush Pipe



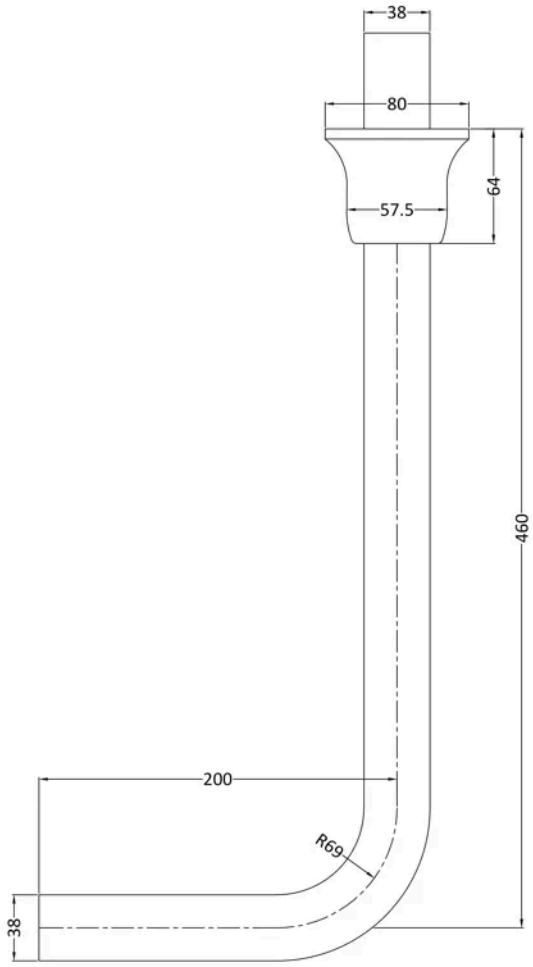

Product Dimensions

Product	480 x 81 x 220mm (H x W x D)
Packaged	75 x 200 x 540mm (H x W x D)
Nett Weight	0.7 kg
Packaged Weight	0.81 kg

Packaging Details

Box Qty	1
Label Size (mm)	50 x 100
Label Colour	White
Label Qty	2.0000

Product Details

Country of Origin	China
Product Material	Brass
Colour/Finish	Chrome
Style	Traditional
Fixings Included	No
Product Diameter	38 mm

© ROXOR Group

Sales Code: BAYC017 **Barcode:** 5055275892299 **Brand:** Bayswater **Description:** Bayswater Fitzroy Traditional Toilet High/Low Level Pan



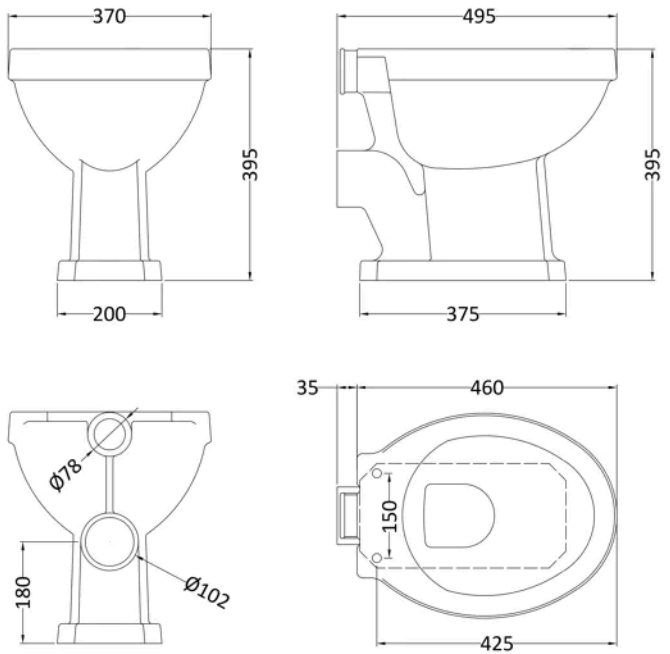

Product Dimensions

Product	410 x 360 x 495mm (H x W x D)
Packaged	395 x 360 x 530mm (H x W x D)
Nett Weight	16 kg
Packaged Weight	16.6 kg

Product Details

Country of Origin	China
Product Material	Vitreous China
Colour/Finish	White
Style	Traditional
Ce Certified	Yes
Includes Seat	No
Pan Type	Open To Wall

© ROXOR Group

Sales Code: BAYC018 **Barcode:** 5055275892305 **Brand:** Bayswater **Description:** Bayswater Fitzroy Low Level Cistern With Ceramic Lever & Fittings



Technical Drawing Not Available

Product Dimensions

Product	370 x 474 x 180mm (H x W x D)
Packaged	390 x 494 x 200mm (H x W x D)
Nett Weight	14.5 kg
Packaged Weight	16.5 kg

Product Details

Country of Origin	China
Product Material	Vitreous China
Colour/Finish	White
Style	Traditional
Ce Certified	Yes
Includes Seat	No

© ROXOR Group

Sales Code: BAYF149

Barcode: 5055275893265

Brand: Bayswater

Description: Bayswater Fitzroy Matt Black Round Wooden Soft Close Traditional Toilet Seat With Chrome Top Fix Hinge



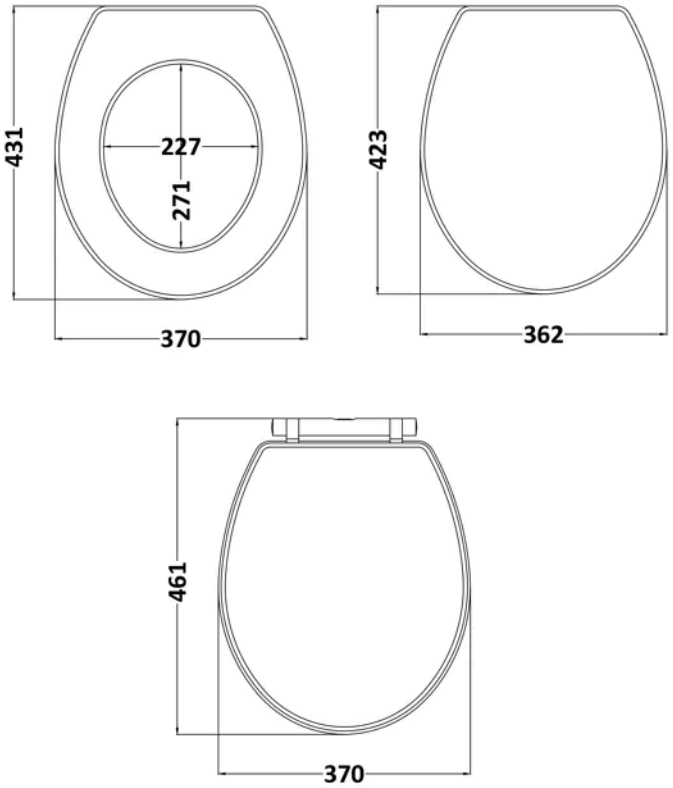

Product Dimensions

Product	60 x 370 x 461mm (H x W x D)
Packaged	70 x 395 x 475mm (H x W x D)
Nett Weight	3.1 kg
Packaged Weight	3.3 kg

Packaging Details

Label Size (mm)	50 x 110
Label Colour	White
Label Qty	2.0000

Product Details

Country of Origin	Ukraine
Product Material	Mdf Paint,Zinc Alloy
Colour/Finish	Matt Black
Style	Traditional
Fixings Included	Yes
Hinge Centres (Max)	186 mm
Hinge Centres (Min)	150 mm
Toilet Seat Function	Soft Close
Toilet Seat Hinge Type	Top Fix
Toilet Seat Type	Round

© ROXOR Group