Sales Code: BAYCFHLHGS

Barcode: 5056817740641

Brand: Bayswater

Description: Bayswater Fitzroy Traditional High Level Toilet With Hunter Green Soft Close Seat, Cistern & Flush Pipe



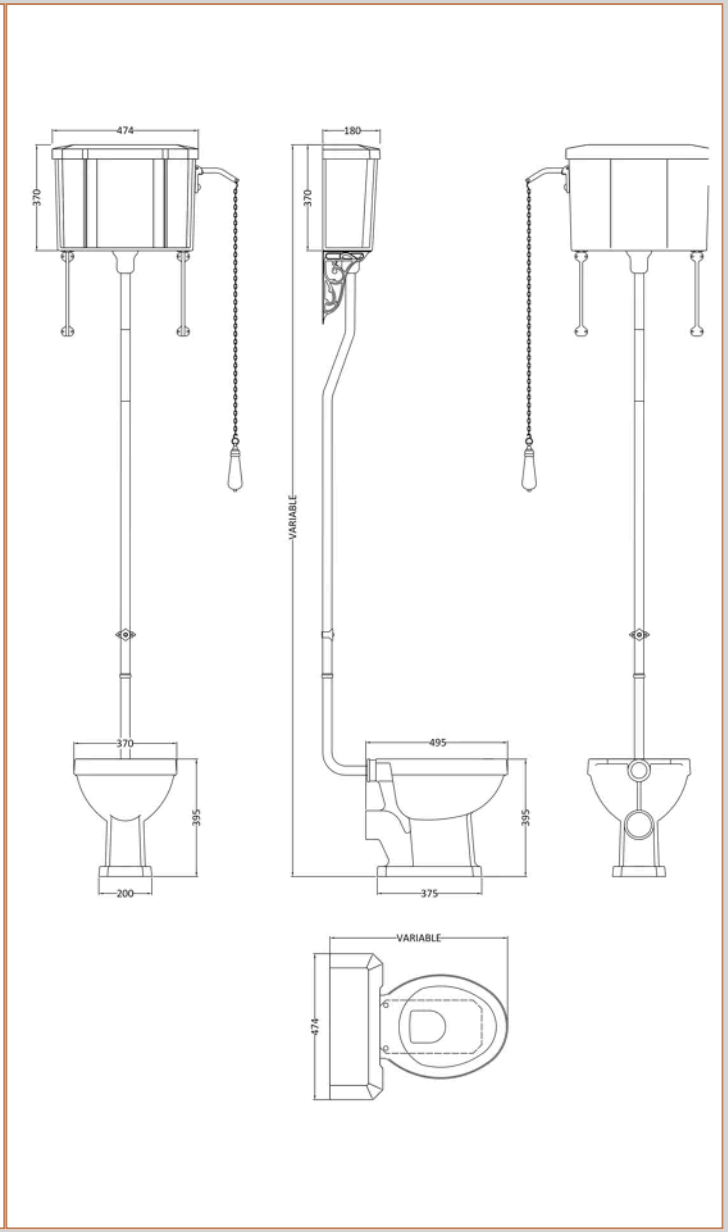

Product Dimensions

Product	2140 x 465 x 625mm (H x W x D)
Packaged	2290 x 1349 x 1390mm (H x W x D)
Nett Weight	39.07 kg
Packaged Weight	39.07 kg

Product Details

Country of Origin	China
Product Material	Brass,Mdf Paint,Vitreous China,Zinc Alloy
Colour/Finish	White
Style	Traditional
Ce Certified	Yes
Hinge Centres (Max)	186 mm
Hinge Centres (Min)	150 mm
Pan Type	Open To Wall
Toilet Seat Function	Soft Close
Toilet Seat Hinge Type	Top Fix
Toilet Seat Type	Round

© ROXOR Group

Sales Code: BAYA015 **Barcode:** 5055275890417 **Brand:** Bayswater **Description:** Bayswater Chrome High Level Flush Pipe Pack



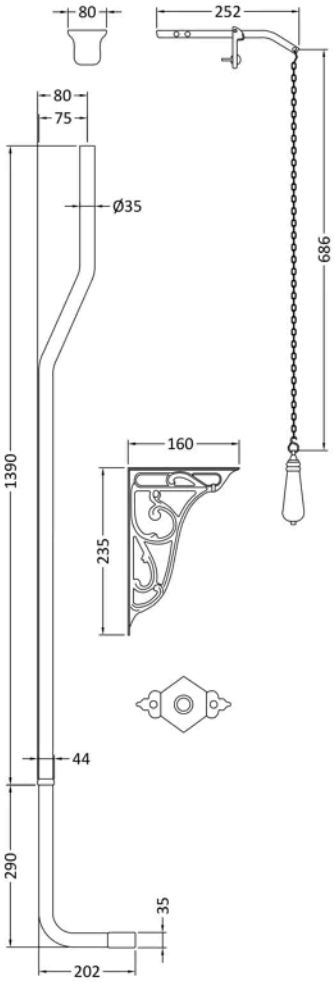

Product Dimensions

Product	1680 x 80 x 202mm (H x W x D)
Packaged	100 x 185 x 1435mm (H x W x D)
Nett Weight	2.8 kg
Packaged Weight	3.07 kg

Packaging Details

Box Qty	1
Label Size (mm)	50 x 100
Label Colour	White
Label Qty	2.0000

Product Details

Country of Origin	China
Product Material	Brass
Colour/Finish	Chrome
Style	Traditional
Fixings Included	Yes
Product Diameter	35 mm

© ROXOR Group

Sales Code: BAYC017 **Barcode:** 5055275892299 **Brand:** Bayswater **Description:** Bayswater Fitzroy Traditional Toilet High/Low Level Pan



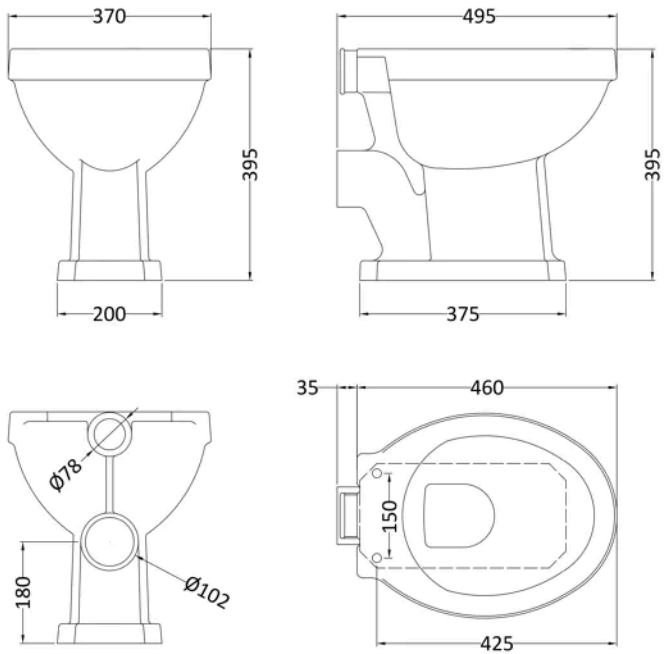

Product Dimensions

Product	410 x 360 x 495mm (H x W x D)
Packaged	395 x 360 x 530mm (H x W x D)
Nett Weight	16 kg
Packaged Weight	16.6 kg

Product Details

Country of Origin	China
Product Material	Vitreous China
Colour/Finish	White
Style	Traditional
Ce Certified	Yes
Includes Seat	No
Pan Type	Open To Wall

© ROXOR Group

Sales Code: BAYC020 **Barcode:** 5055275892329 **Brand:** Bayswater **Description:** Bayswater Fitzroy High Level Cistern With Fittings, Excluding Brackets & Pipe



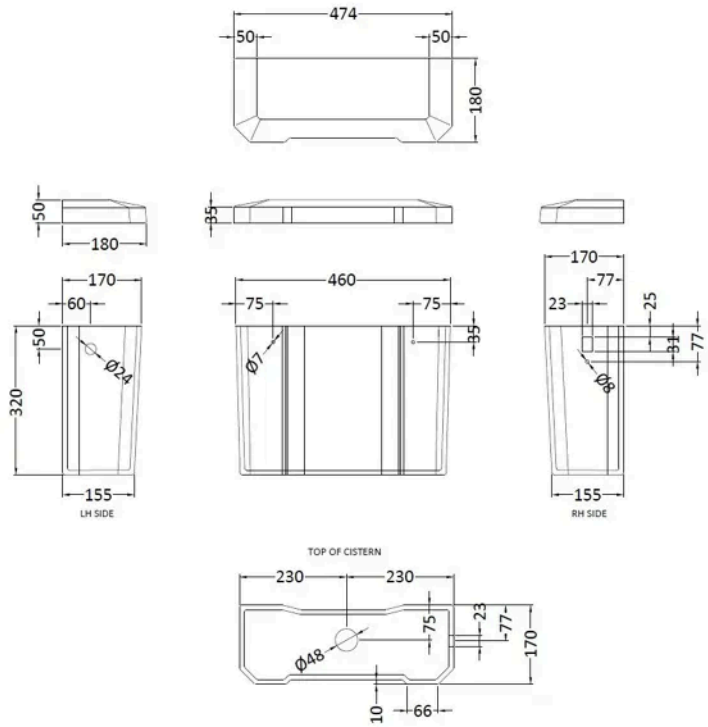

Product Dimensions

Product	370 x 474 x 180mm (H x W x D)
Packaged	390 x 494 x 200mm (H x W x D)
Nett Weight	14.5 kg
Packaged Weight	16 kg

Product Details

Country of Origin	China
Product Material	Vitreous China
Colour/Finish	White
Style	Traditional
Ce Certified	Yes
Includes Seat	No

© ROXOR Group

Sales Code: BAYF867

Barcode: 5056817723606

Brand: Bayswater

Description: Bayswater Fitzroy Hunter Green Round Wooden Soft Close Traditional Toilet Seat With Chrome Top Fix Hinge



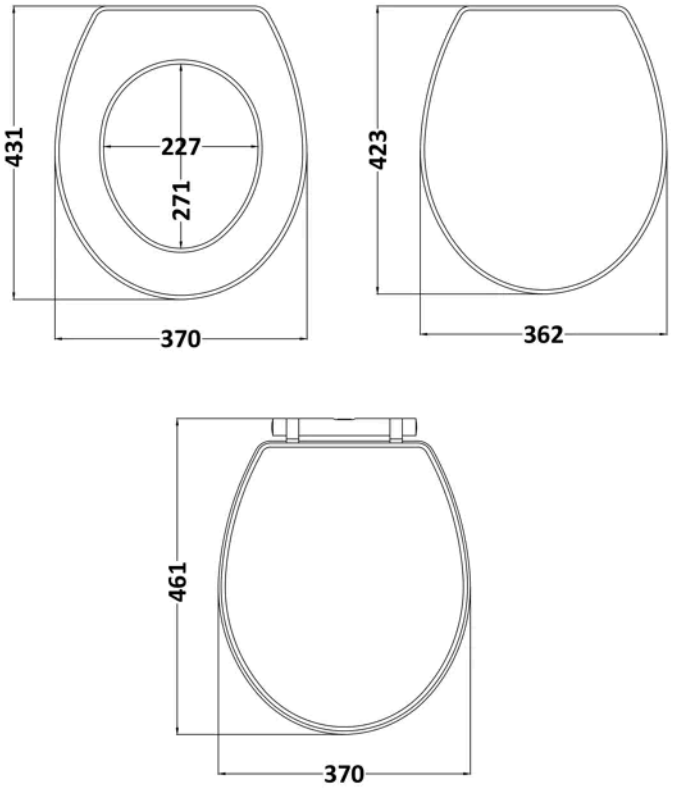

Product Dimensions

Product	60 x 370 x 461mm (H x W x D)
Packaged	70 x 395 x 475mm (H x W x D)
Nett Weight	3.2 kg
Packaged Weight	3.4 kg

Packaging Details

Label Size (mm)	50 x 100
Label Colour	White
Label Qty	2.0000

Product Details

Country of Origin	Ukraine
Product Material	Mdf Paint,Zinc Alloy
Colour/Finish	Hunter Green
Style	Traditional
Fixings Included	Yes
Hinge Centres (Max)	186 mm
Hinge Centres (Min)	150 mm
Toilet Seat Function	Soft Close
Toilet Seat Hinge Type	Top Fix
Toilet Seat Type	Round

© ROXOR Group