Sales Code: BAYCFCCWS **Barcode:** 5056817740306 **Brand:** Bayswater **Description:** Bayswater Fitzroy Traditional Close Coupled Toilet With Wooden Seat



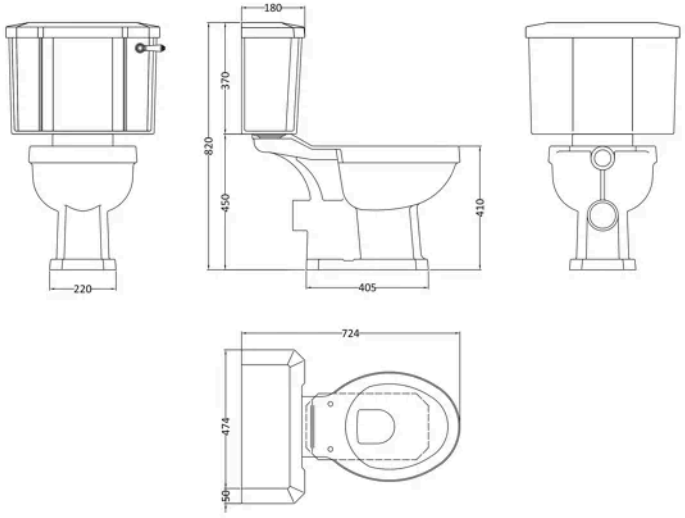

Product Dimensions

Product	795 x 474 x 720mm (H x W x D)
Packaged	840 x 1574 x 1120mm (H x W x D)
Nett Weight	42.4 kg
Packaged Weight	42.4 kg

Product Details

Country of Origin	China
Product Material	Mdf Paint,Vitreous China,Zinc Alloy
Colour/Finish	White
Style	Traditional
Ce Certified	Yes
Hinge Centres (Max)	165 mm
Hinge Centres (Min)	145 mm
Pan Type	Open To Wall
Toilet Seat Function	Standard
Toilet Seat Hinge Type	Bottom Fix
Toilet Seat Type	Round

© ROXOR Group

Sales Code: BAYC014 **Barcode:** 5055275892268 **Brand:** Bayswater **Description:** Bayswater Fitzroy Traditional Close Coupled Pan



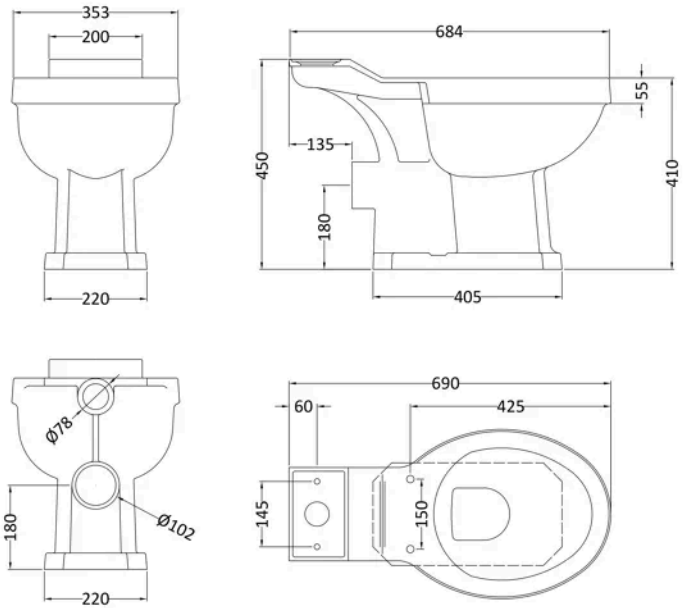

Product Dimensions

Product	450 x 353 x 684mm (H x W x D)
Packaged	380 x 700 x 450mm (H x W x D)
Nett Weight	19.7 kg
Packaged Weight	22.9 kg

Product Details

Country of Origin	China
Product Material	Vitreous China
Colour/Finish	White
Style	Traditional
Ce Certified	Yes
Includes Seat	No
Pan Type	Open To Wall

© ROXOR Group

Sales Code: BAYC015 **Barcode:** 5055275892275 **Brand:** Bayswater **Description:** Bayswater Fitzroy Cistern With Lever Close Coupled



Technical Drawing Not Available

Product Dimensions

Product	370 x 474 x 180mm (H x W x D)
Packaged	390 x 494 x 200mm (H x W x D)
Nett Weight	14.5 kg
Packaged Weight	16.5 kg

Product Details

Country of Origin	China
Product Material	Vitreous China
Colour/Finish	White
Style	Traditional
Ce Certified	Yes
Includes Seat	No

© ROXOR Group

Sales Code: BAYF169 **Barcode:** 5056211842668 **Brand:** Bayswater **Description:** Bayswater White Round Wooden Traditional Toilet Seat With Bottom Fix Hinge



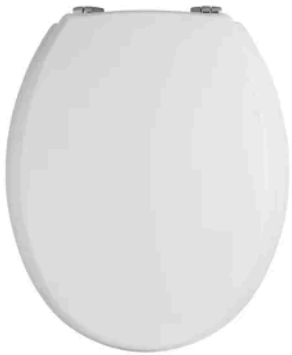

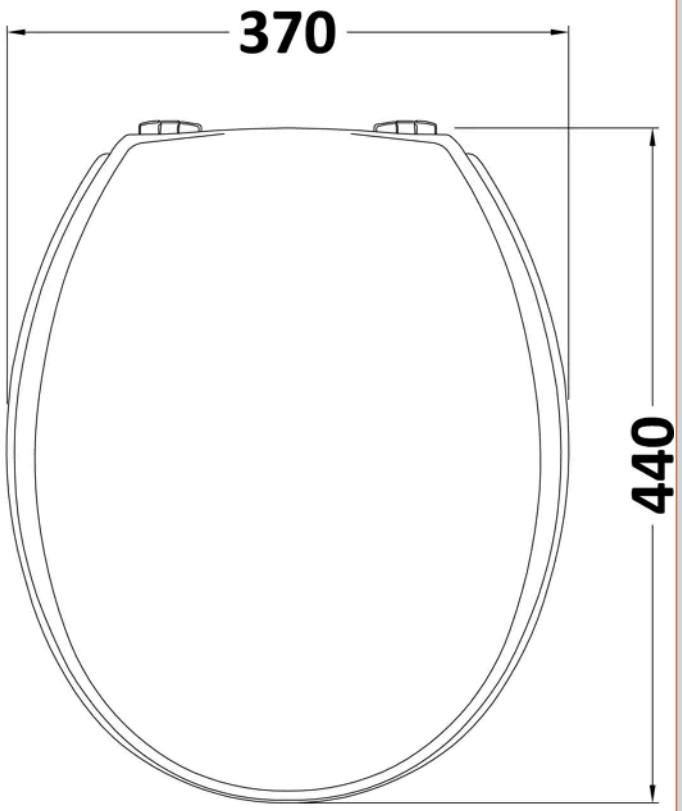

Product Dimensions

Product	60 x 370 x 410mm (H x W x D)
Packaged	70 x 380 x 470mm (H x W x D)
Outer Box	490mm (H)
Nett Weight	2.7 kg
Packaged Weight	3 kg

Packaging Details

Label Size (mm)	50 x 100
Label Colour	White
Label Qty	1.0000

Product Details

Country of Origin	China
Product Material	Mdf Paint,Zinc Alloy
Colour/Finish	White
Style	Traditional
Fixings Included	Yes
Ce Certified	No
Hinge Centres (Max)	165 mm
Hinge Centres (Min)	145 mm
Toilet Seat Function	Standard
Toilet Seat Hinge Type	Bottom Fix
Toilet Seat Type	Round

© ROXOR Group