Sales Code: BAYCFCCPGS **Barcode:** 5056817740221 **Brand:** Bayswater **Description:** Bayswater Fitzroy Traditional Close Coupled Toilet With Wooden Seat



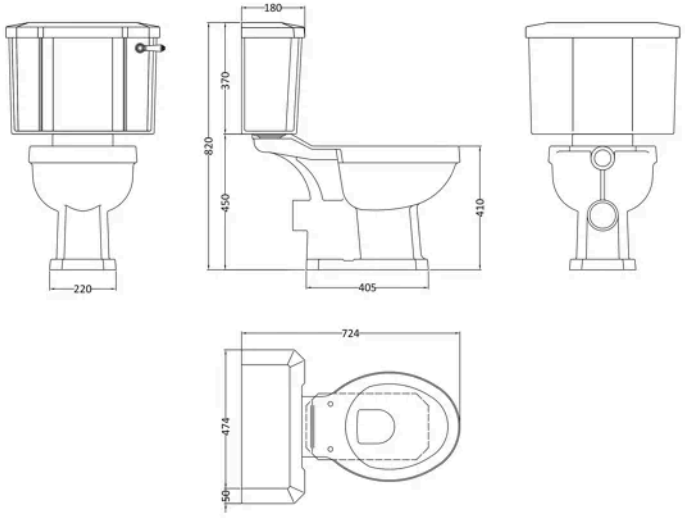

Product Dimensions

Product	795 x 474 x 720mm (H x W x D)
Packaged	770 x 1690 x 1260mm (H x W x D)
Nett Weight	42.7 kg
Packaged Weight	42.7 kg

Product Details

Country of Origin	China
Product Material	Mdf Paint,Vitreous China,Zinc Alloy
Colour/Finish	White
Style	Traditional
Ce Certified	Yes
Hinge Centres (Max)	186 mm
Hinge Centres (Min)	150 mm
Pan Type	Open To Wall
Toilet Seat Function	Soft Close
Toilet Seat Hinge Type	Top Fix
Toilet Seat Type	Round

© ROXOR Group

Sales Code: BAYC014 **Barcode:** 5055275892268 **Brand:** Bayswater **Description:** Bayswater Fitzroy Traditional Close Coupled Pan



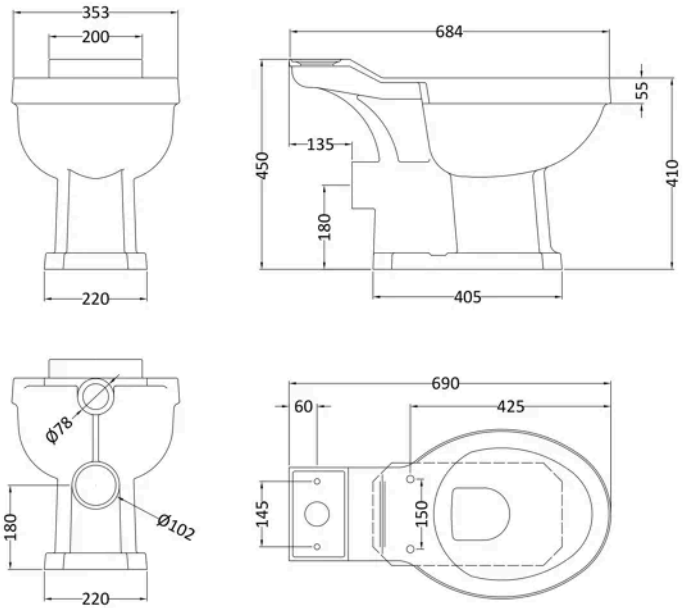

Product Dimensions

Product	450 x 353 x 684mm (H x W x D)
Packaged	380 x 700 x 450mm (H x W x D)
Nett Weight	19.7 kg
Packaged Weight	22.9 kg

Product Details

Country of Origin	China
Product Material	Vitreous China
Colour/Finish	White
Style	Traditional
Ce Certified	Yes
Includes Seat	No
Pan Type	Open To Wall

© ROXOR Group

Sales Code: BAYC015 **Barcode:** 5055275892275 **Brand:** Bayswater **Description:** Bayswater Fitzroy Cistern With Lever Close Coupled



Technical Drawing Not Available

Product Dimensions

Product	370 x 474 x 180mm (H x W x D)
Packaged	390 x 494 x 200mm (H x W x D)
Nett Weight	14.5 kg
Packaged Weight	16.5 kg

Product Details

Country of Origin	China
Product Material	Vitreous China
Colour/Finish	White
Style	Traditional
Ce Certified	Yes
Includes Seat	No

© ROXOR Group

Sales Code: BAYF151

Barcode: 5055275893272

Brand: Bayswater

Description: Bayswater Fitzroy Plummett Grey Round Wooden Soft Close Traditional Toilet Seat With Chrome Top Fix Hinge



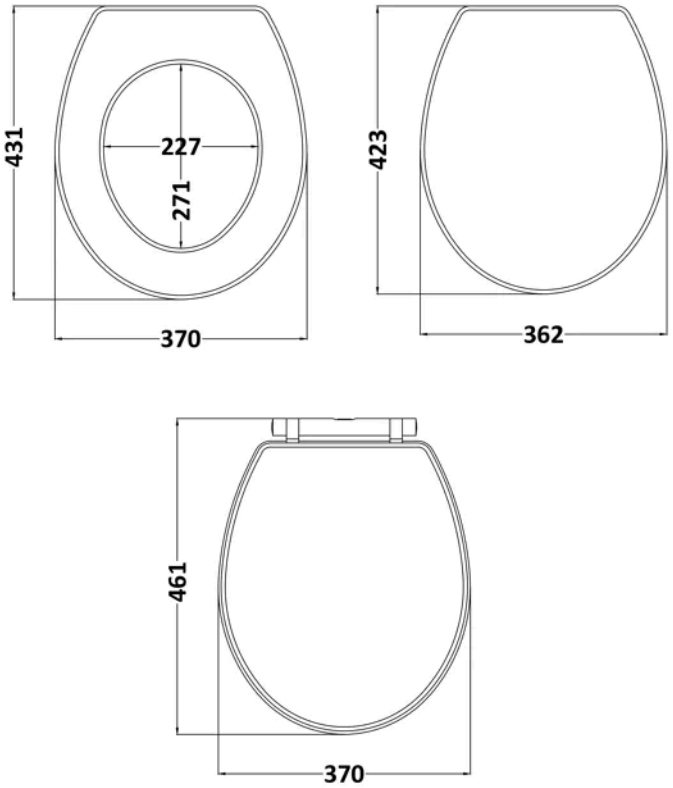

Product Dimensions

Product	60 x 370 x 461mm (H x W x D)
Packaged	70 x 395 x 475mm (H x W x D)
Nett Weight	3.1 kg
Packaged Weight	3.3 kg

Packaging Details

Label Size (mm)	50 x 100
Label Colour	White
Label Qty	2.0000

Product Details

Country of Origin	Ukraine
Product Material	Mdf Paint,Zinc Alloy
Colour/Finish	Plummett Grey
Style	Traditional
Fixings Included	Yes
Hinge Centres (Max)	186 mm
Hinge Centres (Min)	150 mm
Toilet Seat Function	Soft Close
Toilet Seat Hinge Type	Top Fix
Toilet Seat Type	Round

© ROXOR Group