Sales Code: BAYCFBTWWS

Barcode: 5056817740900

Brand: Bayswater

Description: Bayswater Fitzroy Traditional Back to Wall Toilet With White Soft Close Seat & Concealed Cistern



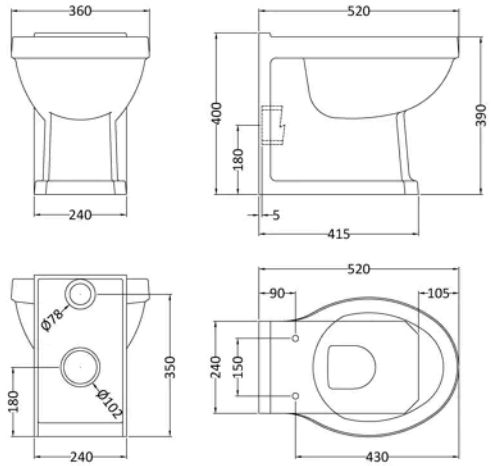

Product Dimensions

Product	420 x 360 x 520mm (H x W x D)
Packaged	795 x 885 x 1335mm (H x W x D)
Nett Weight	25.6 kg
Packaged Weight	25.6 kg

Product Details

Country of Origin	China
Product Material	Hd Polyethylene,Mdf Paint,Vitreous China,Zinc Alloy
Colour/Finish	White
Style	Traditional
Ce Certified	Yes
Hinge Centres (Max)	165 mm
Hinge Centres (Min)	145 mm
Pan Type	Open To Wall
Toilet Seat Function	Standard
Toilet Seat Hinge Type	Bottom Fix
Toilet Seat Type	Round

© ROXOR Group

Sales Code: BAYA102 **Barcode:** 5056211803805 **Brand:** Bayswater **Description:** Bayswater Black Concealed Cistern and Dual Flush Push Button



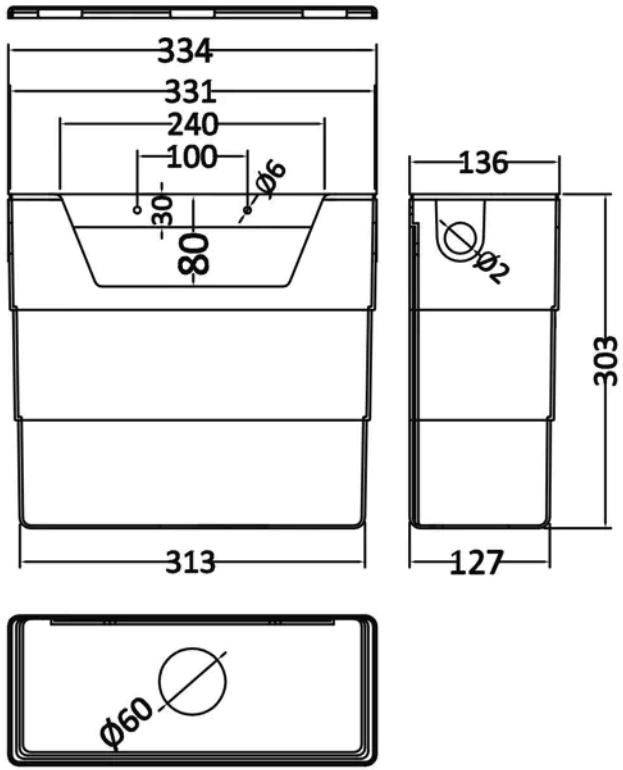

Product Dimensions

Product	303 x 334 x 136mm (H x W x D)
Packaged	320 x 145 x 345mm (H x W x D)
Nett Weight	1.8 kg
Packaged Weight	2 kg

Packaging Details

Box Qty	1
Label Size (mm)	50 x 100
Label Colour	White
Label Qty	2.0000

Product Details

Country of Origin	China
Product Material	Polyethylene
Colour/Finish	Chrome
Style	Contemporary
Ce Certified	Yes
Ukca Certified	Yes

© ROXOR Group

Sales Code: BAYC021 **Barcode:** 5055275892336 **Brand:** Bayswater **Description:** Bayswater Fitzroy Traditional Back to Wall Toilet Pan



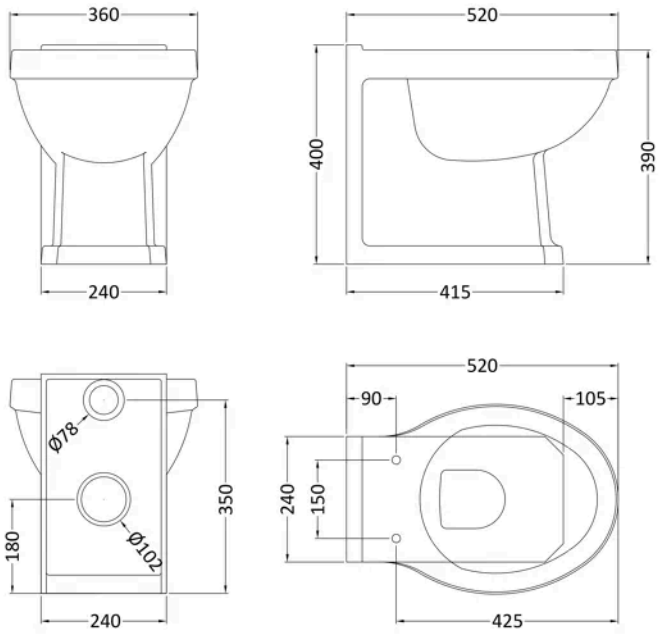

Product Dimensions

Product	420 x 360 x 520mm (H x W x D)
Packaged	405 x 360 x 520mm (H x W x D)
Nett Weight	19.6 kg
Packaged Weight	20.6 kg

Product Details

Country of Origin	China
Product Material	Vitreous China
Colour/Finish	White
Style	Traditional
Ce Certified	Yes
Includes Seat	No
Pan Type	Back To Wall

© ROXOR Group

Sales Code: BAYF169 **Barcode:** 5056211842668 **Brand:** Bayswater **Description:** Bayswater White Round Wooden Traditional Toilet Seat With Bottom Fix Hinge



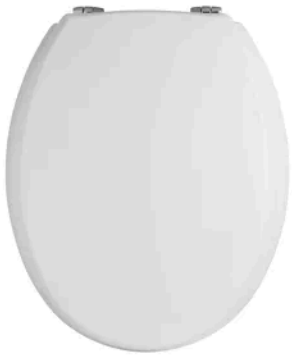

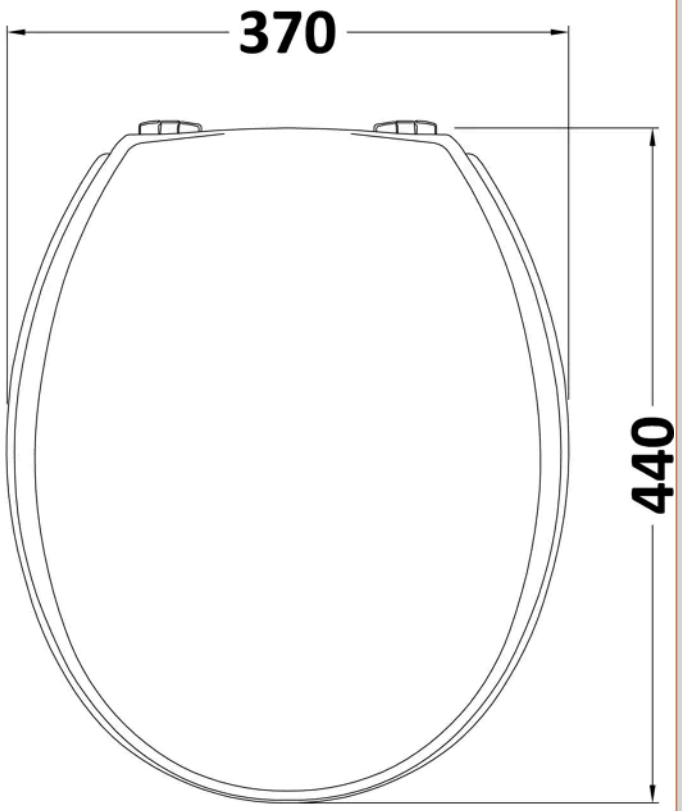

Product Dimensions

Product	60 x 370 x 410mm (H x W x D)
Packaged	70 x 380 x 470mm (H x W x D)
Outer Box	490mm (H)
Nett Weight	2.7 kg
Packaged Weight	3 kg

Packaging Details

Label Size (mm)	50 x 100
Label Colour	White
Label Qty	1.0000

Product Details

Country of Origin	China
Product Material	Mdf Paint,Zinc Alloy
Colour/Finish	White
Style	Traditional
Fixings Included	Yes
Ce Certified	No
Hinge Centres (Max)	165 mm
Hinge Centres (Min)	145 mm
Toilet Seat Function	Standard
Toilet Seat Hinge Type	Bottom Fix
Toilet Seat Type	Round

© ROXOR Group