Sales Code: BAYCFBTWSBSC

Barcode: 5056817740924

Brand: Bayswater

Description: Bayswater Fitzroy Traditional Comfort Height Back to Wall Toilet With Stiffkey Blue Soft Close Seat & Concealed Cistern



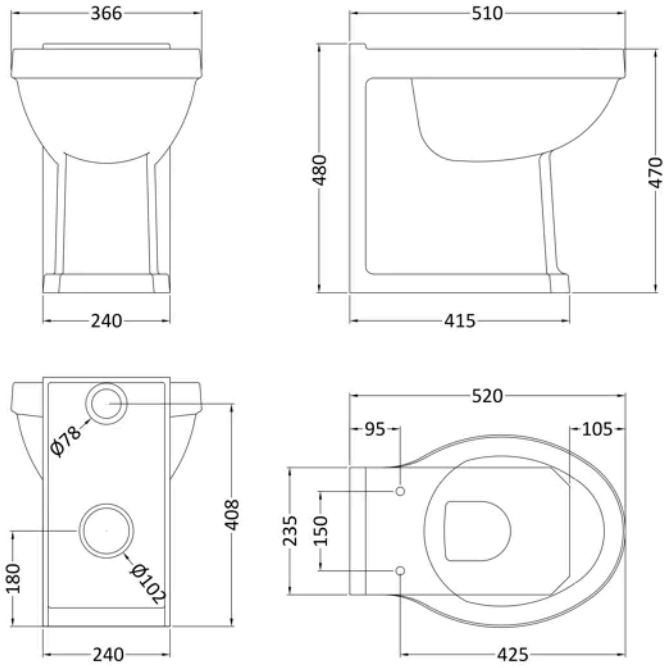

Product Dimensions

Product	480 x 370 x 515mm (H x W x D)
Packaged	880 x 920 x 1360mm (H x W x D)
Nett Weight	29.1 kg
Packaged Weight	29.1 kg

Product Details

Country of Origin	China
Product Material	Hd Polyethylene,Mdf Paint,Vitreous China,Zinc Alloy
Colour/Finish	White
Style	Traditional
Ce Certified	Yes
Hinge Centres (Max)	186 mm
Hinge Centres (Min)	150 mm
Pan Type	Comfort Height
Toilet Seat Function	Soft Close
Toilet Seat Hinge Type	Top Fix
Toilet Seat Type	Round

© ROXOR Group

Sales Code: BAYA102 **Barcode:** 5056211803805 **Brand:** Bayswater **Description:** Bayswater Black Concealed Cistern and Dual Flush Push Button



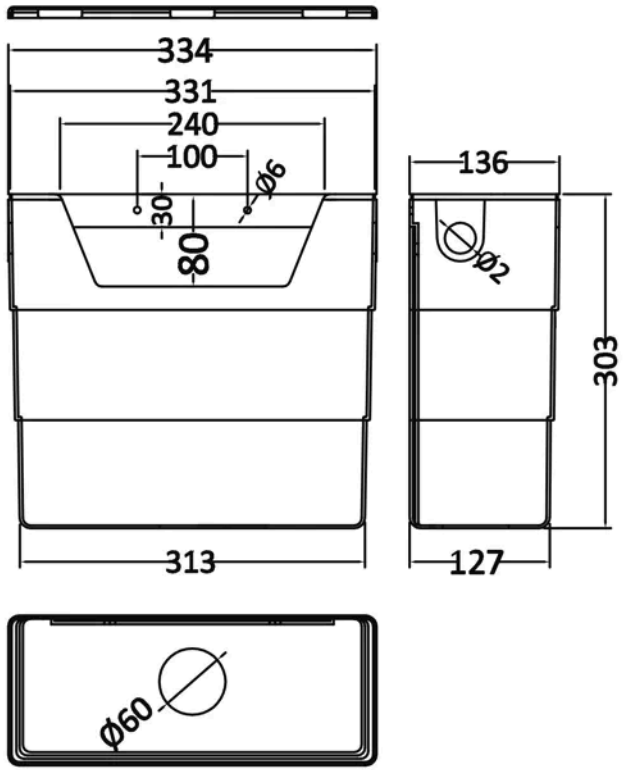

Product Dimensions

Product	303 x 334 x 136mm (H x W x D)
Packaged	320 x 145 x 345mm (H x W x D)
Nett Weight	1.8 kg
Packaged Weight	2 kg

Packaging Details

Box Qty	1
Label Size (mm)	50 x 100
Label Colour	White
Label Qty	2.0000

Product Details

Country of Origin	China
Product Material	Polyethylene
Colour/Finish	Chrome
Style	Contemporary
Ce Certified	Yes
Ukca Certified	Yes

© ROXOR Group

Sales Code: BAYC022 **Barcode:** 5055275892343 **Brand:** Bayswater **Description:** Bayswater Fitzroy Traditional Comfort Height Toilet Pan Back to Wall



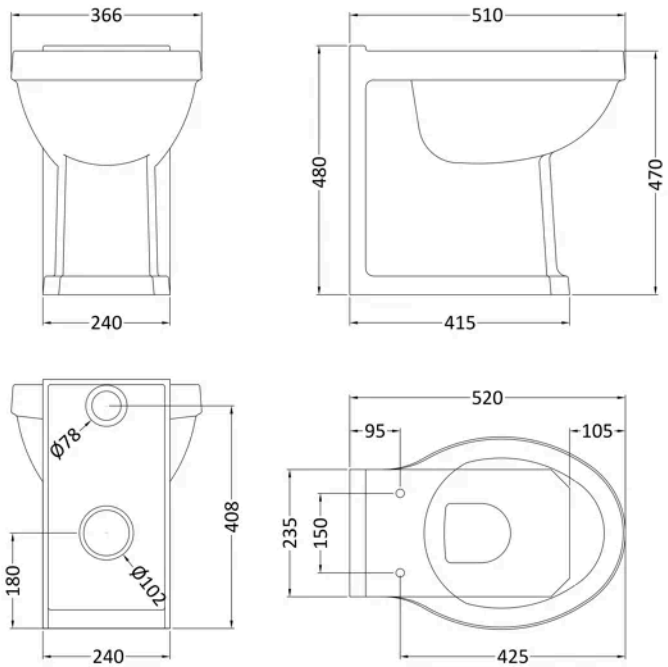

Product Dimensions

Product	480 x 370 x 520mm (H x W x D)
Packaged	490 x 380 x 540mm (H x W x D)
Nett Weight	22.8 kg
Packaged Weight	23.8 kg

Product Details

Country of Origin	China
Product Material	Vitreous China
Colour/Finish	White
Style	Traditional
Ce Certified	Yes
Includes Seat	No
Pan Type	Comfort Height

© ROXOR Group

Sales Code: BAYF152

Barcode: 5055275893289

Brand: Bayswater

Description: Bayswater Fitzroy Stiffkey Blue Round Wooden Soft Close Traditional Toilet Seat With Chrome Top Fix Hinge



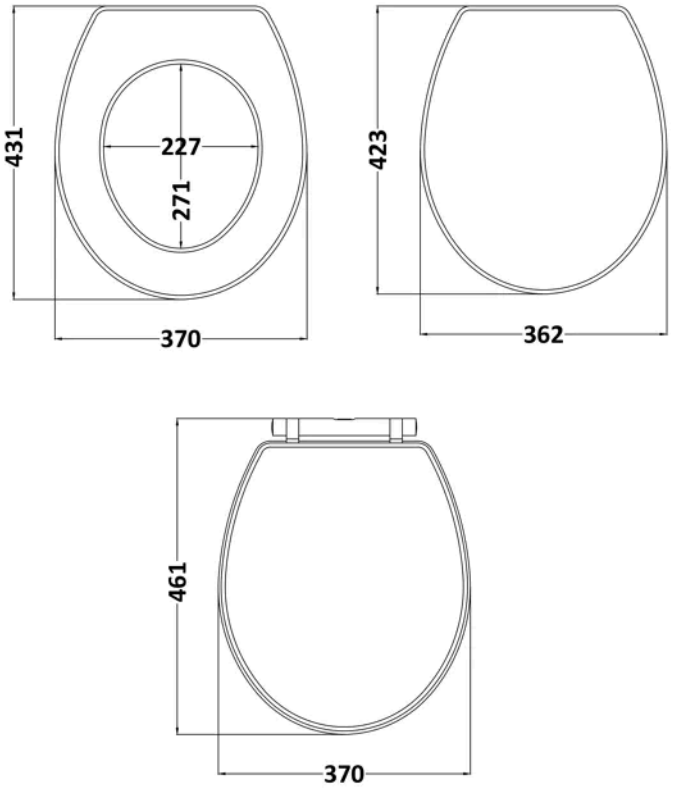

Product Dimensions

Product	60 x 370 x 461mm (H x W x D)
Packaged	70 x 395 x 475mm (H x W x D)
Nett Weight	3.1 kg
Packaged Weight	3.3 kg

Packaging Details

Label Size (mm)	50 x 100
Label Colour	White
Label Qty	2.0000

Product Details

Country of Origin	Ukraine
Product Material	Mdf Paint,Zinc Alloy
Colour/Finish	Stiffkey Blue
Style	Traditional
Fixings Included	Yes
Hinge Centres (Max)	186 mm
Hinge Centres (Min)	150 mm
Toilet Seat Function	Soft Close
Toilet Seat Hinge Type	Top Fix
Toilet Seat Type	Round

© ROXOR Group