Sales Code: BAYCFBTWPWS

Barcode: 5056817740887

Brand: Bayswater

Description: Bayswater Fitzroy Traditional Back to Wall Toilet With Pointing White Soft Close Seat & Concealed Cistern



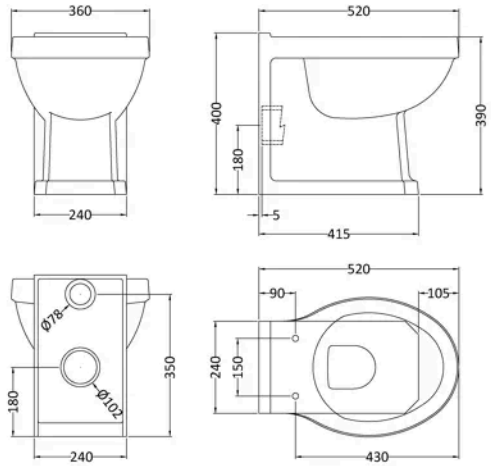

Product Dimensions

Product	420 x 360 x 520mm (H x W x D)
Packaged	795 x 900 x 1340mm (H x W x D)
Nett Weight	25.9 kg
Packaged Weight	25.9 kg

Product Details

Country of Origin	China
Product Material	Hd Polyethylene,Mdf Paint,Vitreous China,Zinc Alloy
Colour/Finish	White
Style	Traditional
Ce Certified	Yes
Hinge Centres (Max)	186 mm
Hinge Centres (Min)	150 mm
Pan Type	Open To Wall
Toilet Seat Function	Soft Close
Toilet Seat Hinge Type	Top Fix
Toilet Seat Type	Round

© ROXOR Group

Sales Code: BAYA102 **Barcode:** 5056211803805 **Brand:** Bayswater **Description:** Bayswater Black Concealed Cistern and Dual Flush Push Button



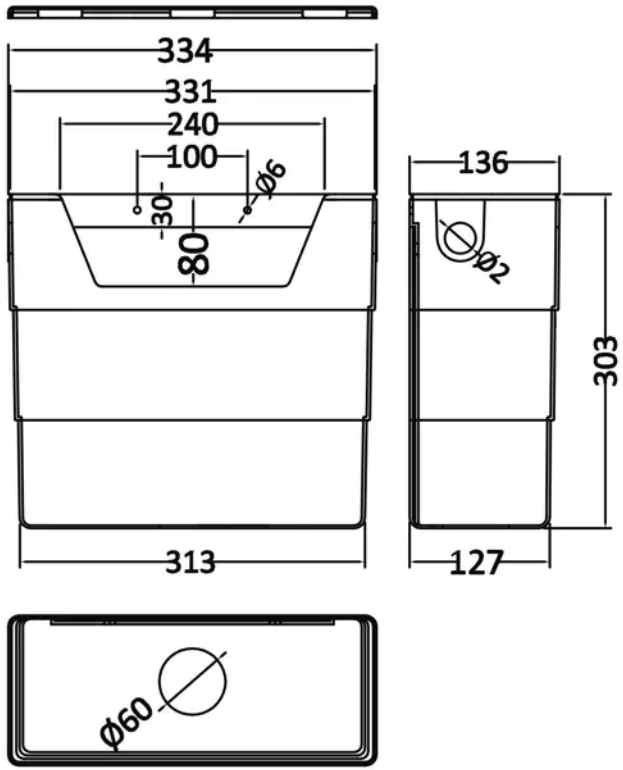

Product Dimensions

Product	303 x 334 x 136mm (H x W x D)
Packaged	320 x 145 x 345mm (H x W x D)
Nett Weight	1.8 kg
Packaged Weight	2 kg

Packaging Details

Box Qty	1
Label Size (mm)	50 x 100
Label Colour	White
Label Qty	2.0000

Product Details

Country of Origin	China
Product Material	Polyethylene
Colour/Finish	Chrome
Style	Contemporary
Ce Certified	Yes
Ukca Certified	Yes

© ROXOR Group

Sales Code: BAYC021 **Barcode:** 5055275892336 **Brand:** Bayswater **Description:** Bayswater Fitzroy Traditional Back to Wall Toilet Pan



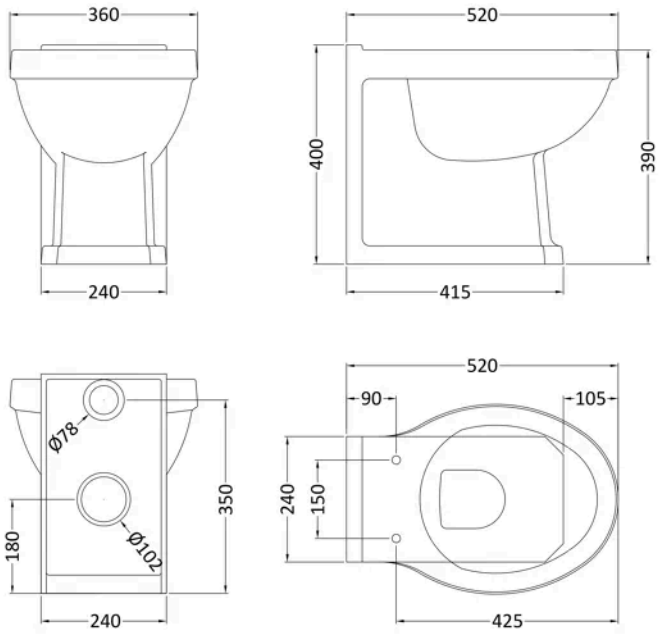

Product Dimensions

Product	420 x 360 x 520mm (H x W x D)
Packaged	405 x 360 x 520mm (H x W x D)
Nett Weight	19.6 kg
Packaged Weight	20.6 kg

Product Details

Country of Origin	China
Product Material	Vitreous China
Colour/Finish	White
Style	Traditional
Ce Certified	Yes
Includes Seat	No
Pan Type	Back To Wall

© ROXOR Group

Sales Code: BAYF150

Barcode: 5055275893296

Brand: Bayswater

Description: Bayswater Fitzroy Pointing White Round Wooden Soft Close Traditional Toilet Seat With Chrome Top Fix Hinge



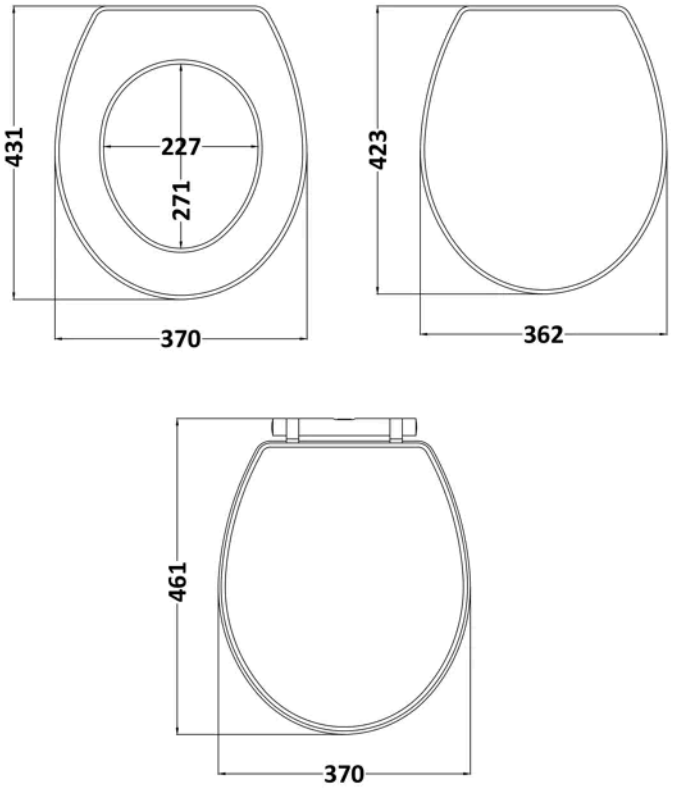

Product Dimensions

Product	60 x 370 x 461mm (H x W x D)
Packaged	70 x 395 x 475mm (H x W x D)
Nett Weight	3.1 kg
Packaged Weight	3.3 kg

Packaging Details

Label Size (mm)	50 x 100
Label Colour	White
Label Qty	2.0000

Product Details

Country of Origin	Ukraine
Product Material	Mdf Paint,Zinc Alloy
Colour/Finish	Pointing White
Style	Traditional
Fixings Included	Yes
Hinge Centres (Max)	186 mm
Hinge Centres (Min)	150 mm
Toilet Seat Function	Soft Close
Toilet Seat Hinge Type	Top Fix
Toilet Seat Type	Round

© ROXOR Group