Sales Code: BAYCF595B3PC **Barcode:** 5056817740078 **Brand:** Bayswater **Description:** Bayswater Fitzroy 3 Tap Hole 595mm Ceramic Basin & Comfort Height Pedestal



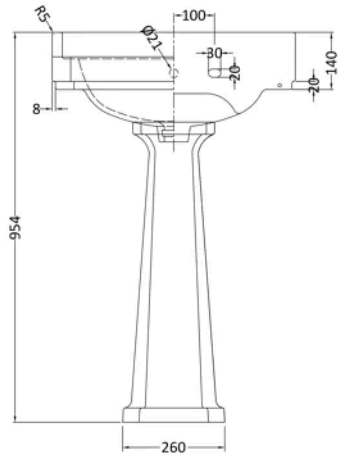

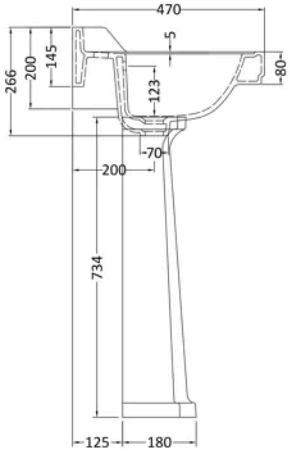

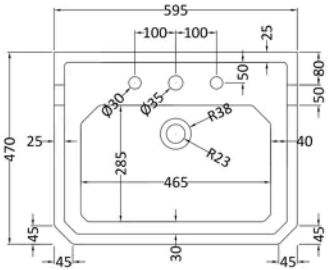

Product Dimensions

Product	964 x 595 x 470mm (H x W x D)
Packaged	427 x 760 x 1205mm (H x W x D)
Nett Weight	34.1 kg
Packaged Weight	34.1 kg

Product Details

Country of Origin	China
Product Material	Vitreous China
Colour/Finish	White
Mount Type	Floor
Style	Traditional
Bottle Trap Included	No
Ce Certified	Yes
Inner Bowl Height	155 mm
No. Of Tapholes	3
Number Of Bowls	1
Overflow Cover Included	No
Overflow Included	Yes
Tap Included	No
Waste Included	No

© ROXOR Group

Sales Code: BAYC009 **Barcode:** 5055275892237 **Brand:** Bayswater **Description:** Bayswater Fitzroy White Traditional Comfort Height Full Pedestal



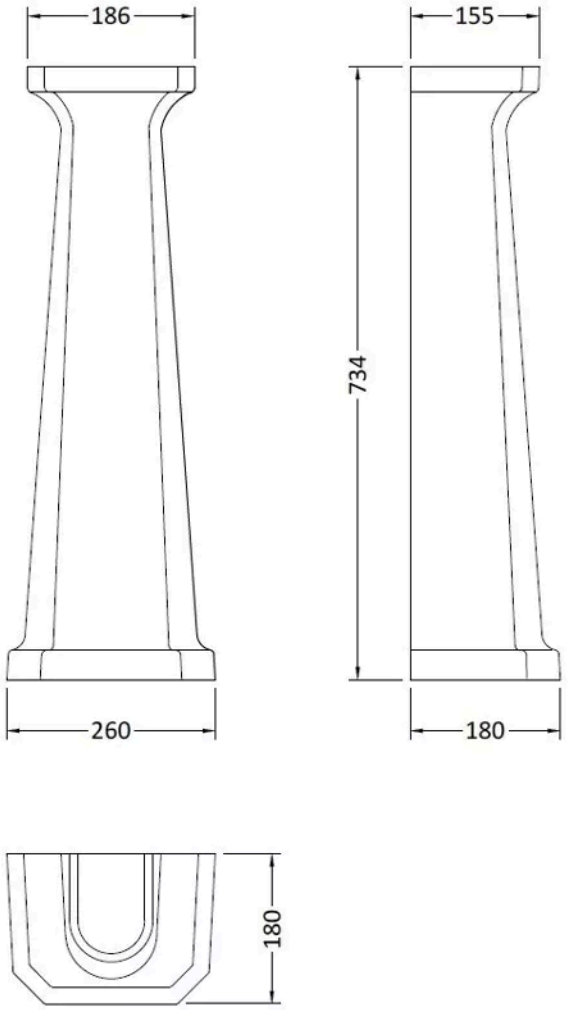

Product Dimensions

Product	734 x 260 x 180mm (H x W x D)
Packaged	140 x 285 x 715mm (H x W x D)
Nett Weight	11.5 kg
Packaged Weight	12 kg

Packaging Details

Box Qty	1

Product Details

Country of Origin	China
Product Material	Vitreous China
Colour/Finish	White
Ce Certified	Yes

© ROXOR Group

Sales Code: BAYC024 **Barcode:** 5055275892176 **Brand:** Bayswater **Description:** Bayswater Fitzroy 3 Tap Hole 595mm Ceramic Basin



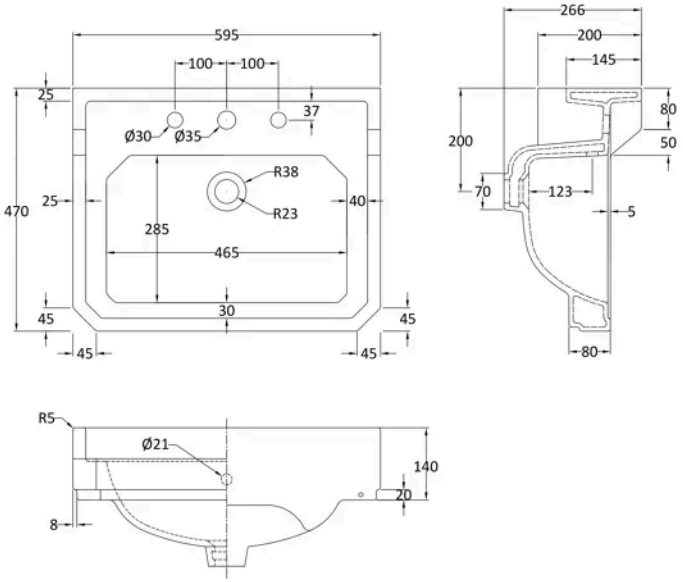

Product Dimensions

Product	266 x 595 x 470mm (H x W x D)
Packaged	287 x 575 x 490mm (H x W x D)
Nett Weight	20.5 kg
Packaged Weight	22.1 kg

Product Details

Country of Origin	China
Product Material	Vitreous China
Colour/Finish	White
Style	Traditional
Ce Certified	Yes
Inner Bowl Height	155 mm
No. Of Tapholes	3
Number Of Bowls	1
Overflow Cover Included	No
Overflow Included	Yes
Tap Included	No
Waste Included	No

© ROXOR Group