Sales Code: BAYCF595B3P **Barcode:** 5056817740061 **Brand:** Bayswater **Description:** Bayswater Fitzroy 3 Tap Hole 595mm Ceramic Basin & Pedestal



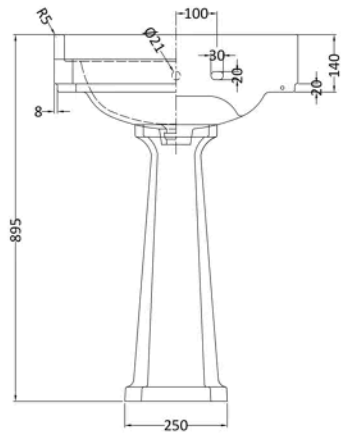

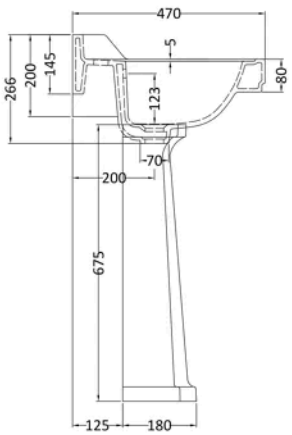

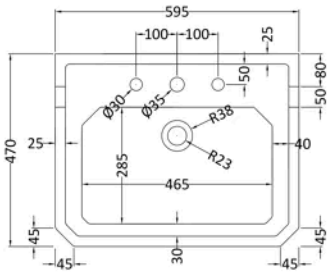

Product Dimensions

Product	905 x 595 x 450mm (H x W x D)
Packaged	427 x 760 x 1205mm (H x W x D)
Nett Weight	33.7 kg
Packaged Weight	33.7 kg

Product Details

Country of Origin	China
Product Material	Vitreous China
Colour/Finish	White
Mount Type	Floor
Style	Traditional
Bottle Trap Included	No
Ce Certified	Yes
Inner Bowl Height	155 mm
No. Of Tapholes	3
Number Of Bowls	1
Overflow Cover Included	No
Overflow Included	Yes
Tap Included	No
Waste Included	No

© ROXOR Group

Sales Code: BAYC002 **Barcode:** 5055275892152 **Brand:** Bayswater **Description:** Bayswater Fitzroy White Traditional Full Pedestal



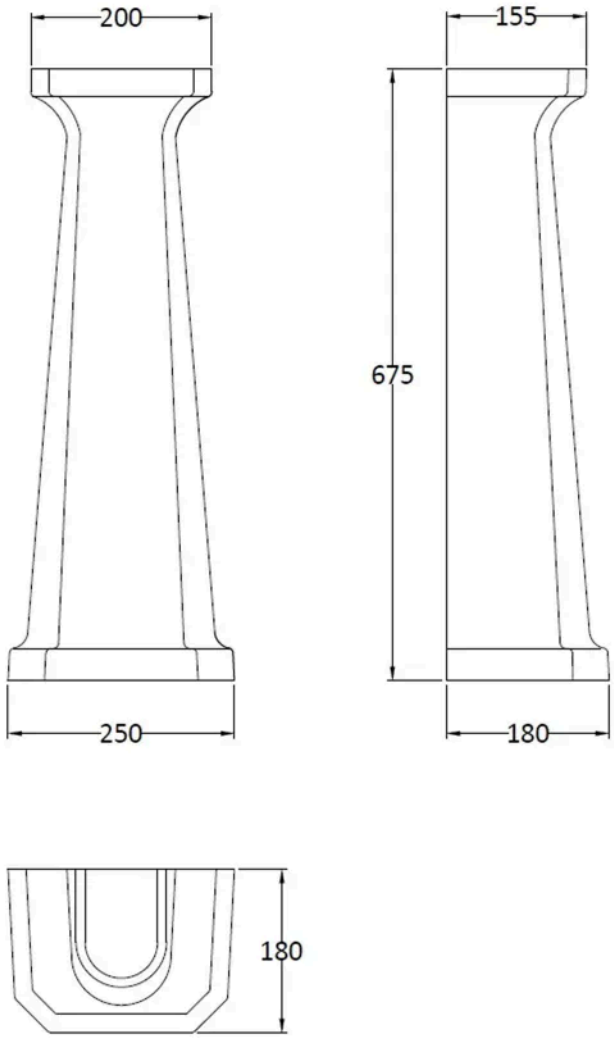

Product Dimensions

Product	670 x 250 x 180mm (H x W x D)
Packaged	290 x 685 x 200mm (H x W x D)
Nett Weight	11 kg
Packaged Weight	11.6 kg

Packaging Details

Box Qty	1

Product Details

Country of Origin	China
Product Material	Vitreous China
Colour/Finish	White
Mount Type	Floor
Style	Contemporary
Ce Certified	Yes

© ROXOR Group

Sales Code: BAYC024 **Barcode:** 5055275892176 **Brand:** Bayswater **Description:** Bayswater Fitzroy 3 Tap Hole 595mm Ceramic Basin



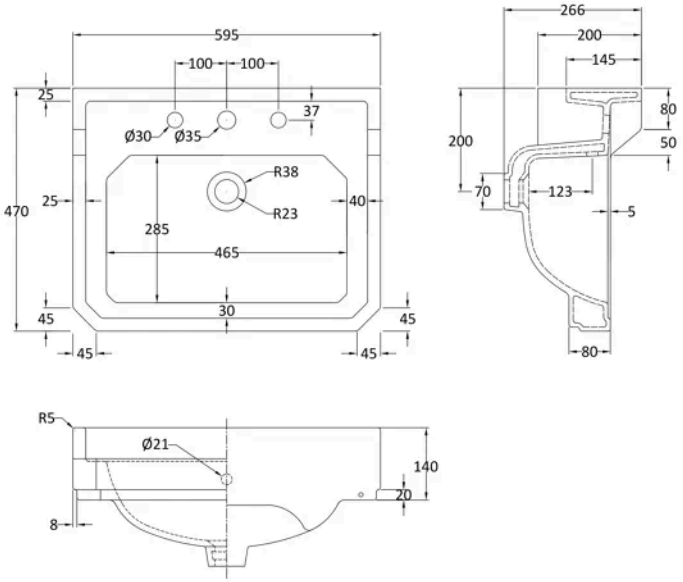

Product Dimensions

Product	266 x 595 x 470mm (H x W x D)
Packaged	287 x 575 x 490mm (H x W x D)
Nett Weight	20.5 kg
Packaged Weight	22.1 kg

Product Details

Country of Origin	China
Product Material	Vitreous China
Colour/Finish	White
Style	Traditional
Ce Certified	Yes
Inner Bowl Height	155 mm
No. Of Tapholes	3
Number Of Bowls	1
Overflow Cover Included	No
Overflow Included	Yes
Tap Included	No
Waste Included	No

© ROXOR Group