Sales Code: BAYCF560B1P **Barcode:** 5056817740108 **Brand:** Bayswater **Description:** Bayswater Fitzroy 1 Tap Hole 560mm Ceramic Basin & Pedestal



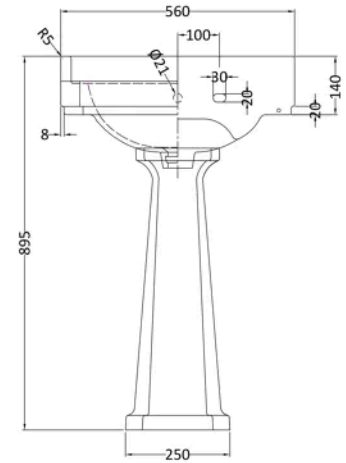

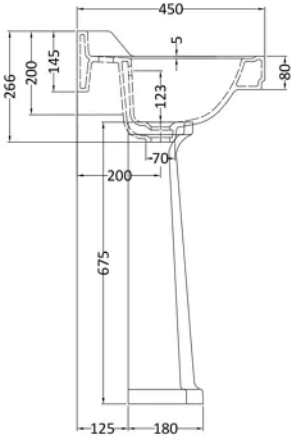

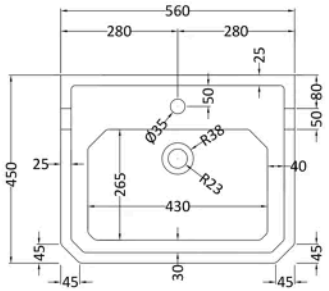

Product Dimensions

Product	897 x 550 x 455mm (H x W x D)
Packaged	427 x 760 x 1205mm (H x W x D)
Nett Weight	29.6 kg
Packaged Weight	29.6 kg

Product Details

Country of Origin	China
Product Material	Vitreous China
Colour/Finish	White
Mount Type	Floor
Style	Traditional
Bottle Trap Included	No
Ce Certified	Yes
Inner Bowl Height	150 mm
No. Of Tapholes	1
Number Of Bowls	1
Overflow Cover Included	No
Overflow Included	Yes
Tap Included	No
Waste Included	No

© ROXOR Group

Sales Code: BAYC002 **Barcode:** 5055275892152 **Brand:** Bayswater **Description:** Bayswater Fitzroy White Traditional Full Pedestal



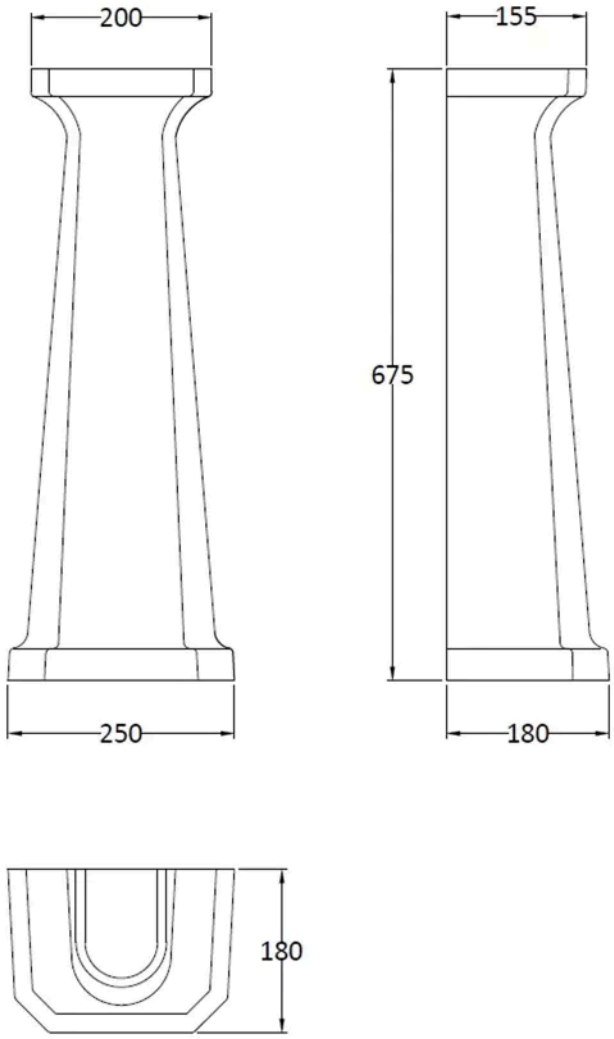

Product Dimensions

Product	675 x 250 x 180mm (H x W x D)
Packaged	140 x 285 x 715mm (H x W x D)
Nett Weight	11 kg
Packaged Weight	11.6 kg

Product Details

Country of Origin	China
Product Material	Vitreous China
Colour/Finish	White
Mount Type	Floor
Style	Traditional
Ce Certified	Yes

© ROXOR Group

Sales Code: BAYC005 **Barcode:** 5055275892190 **Brand:** Bayswater **Description:** Bayswater Fitzroy 1 Tap Hole 560mm Ceramic Basin



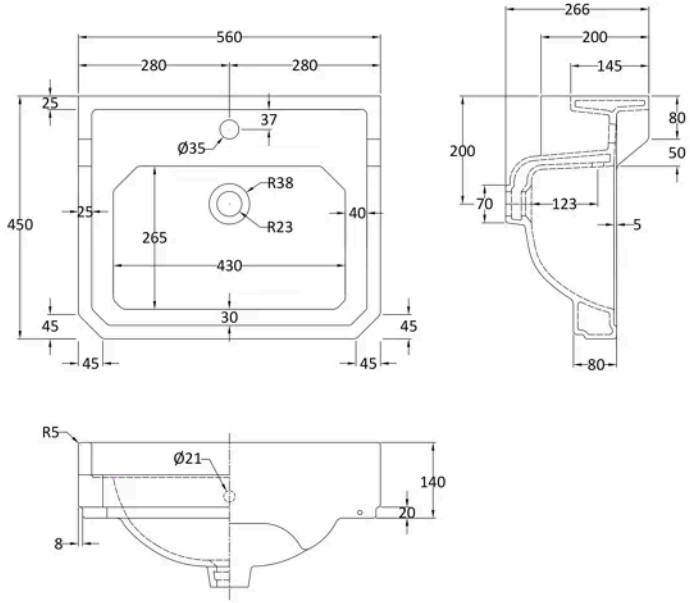

Product Dimensions

Product	266 x 560 x 450mm (H x W x D)
Packaged	287 x 575 x 490mm (H x W x D)
Nett Weight	17.5 kg
Packaged Weight	18 kg

Product Details

Country of Origin	China
Product Material	Vitreous China
Colour/Finish	White
Style	Traditional
Ce Certified	Yes
Inner Bowl Height	150 mm
No. Of Tapholes	1
Number Of Bowls	1
Overflow Cover Included	No
Overflow Included	Yes
Tap Included	No
Waste Included	No

© ROXOR Group