Sales Code: BAYC314 **Barcode:** 5056817724054 **Brand:** Bayswater **Description:** Bayswater Traditional Close Coupled Pan



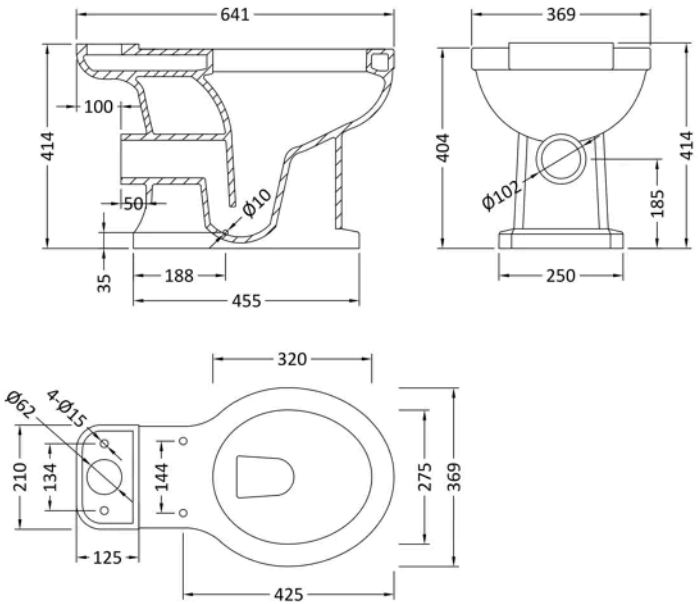

Product Dimensions

Product	410 x 365 x 640mm (H x W x D)
Packaged	482 x 392 x 650mm (H x W x D)
Nett Weight	20 kg
Packaged Weight	20 kg

Product Details

Country of Origin	China
Product Material	Vitreous China
Colour/Finish	White
Style	Traditional
Ce Certified	Yes
Includes Seat	No
Pan Type	Comfort Height

© ROXOR Group