Sales Code: BAYC309 **Barcode:** 5056817724108 **Brand:** Bayswater **Description:** Bayswater Westcott White Traditional Full Pedestal for use with 640mm Basin



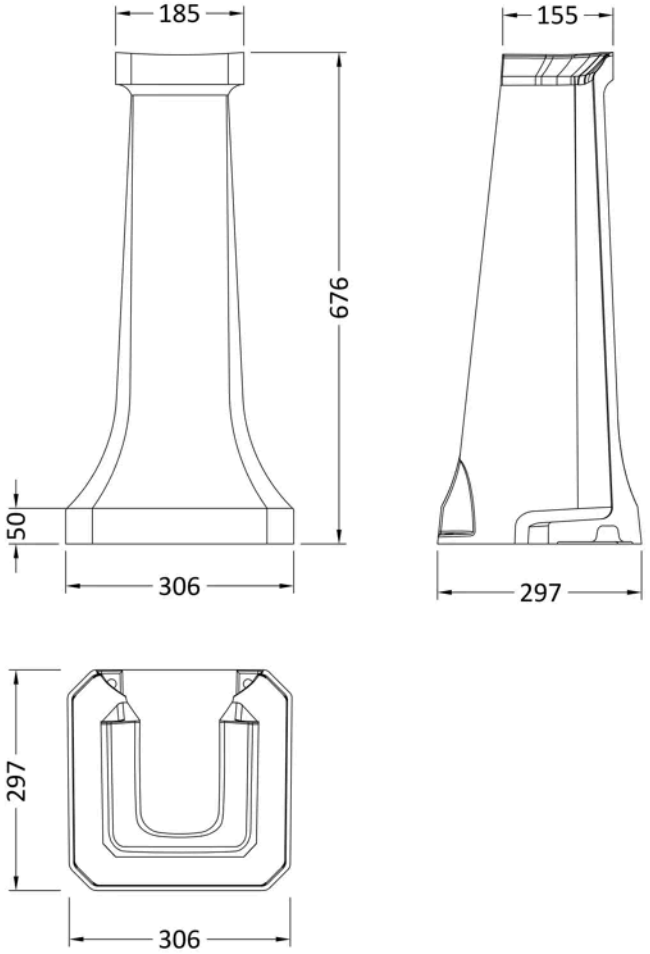

Product Dimensions

Product	685 x 260 x 265mm (H x W x D)
Packaged	690 x 315 x 315mm (H x W x D)
Nett Weight	12.4 kg
Packaged Weight	12.9 kg

Product Details

Country of Origin	China
Product Material	Ceramic
Colour/Finish	White
Mount Type	Floor
Style	Traditional
Ce Certified	Yes

© ROXOR Group