Sales Code: BAYC269 **Barcode:** 5056817726638 **Brand:** Bayswater **Description:** Bayswater 3 Tap Hole 1000mm Single Bowl Angled Black Marble Top Basin



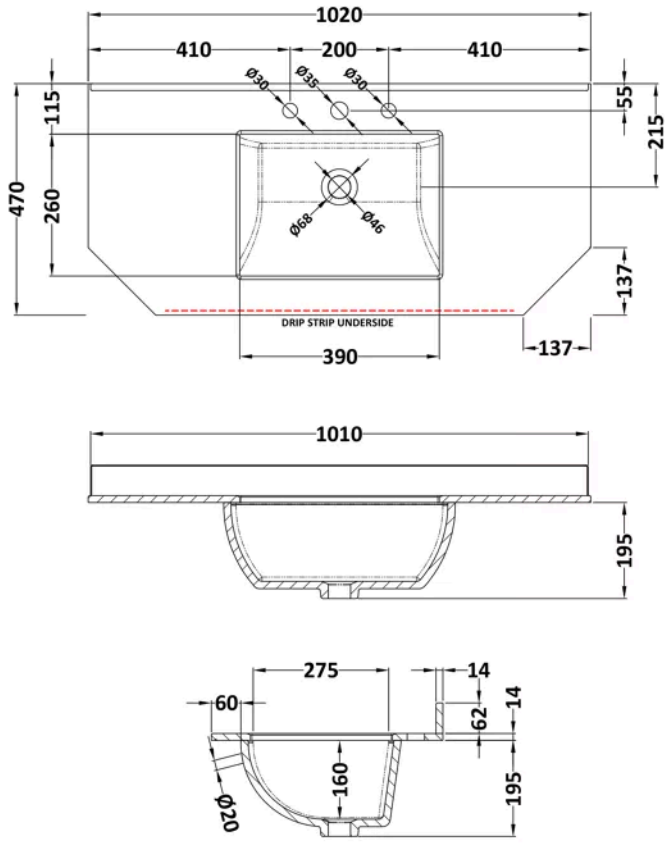

Product Dimensions

Product	268 x 1020 x 470mm (H x W x D)
Packaged	250 x 1100 x 580mm (H x W x D)
Nett Weight	19.5 kg
Packaged Weight	20 kg

Packaging Details

Box Qty	1

Product Details

Country of Origin	China
Product Material	Vitreous China
Colour/Finish	Black

© ROXOR Group