Sales Code: BAYC267 **Barcode:** 5056817726614 **Brand:** Bayswater **Description:** Bayswater 1 Tap Hole 1000mm Single Bowl Angled White Marble Top Basin



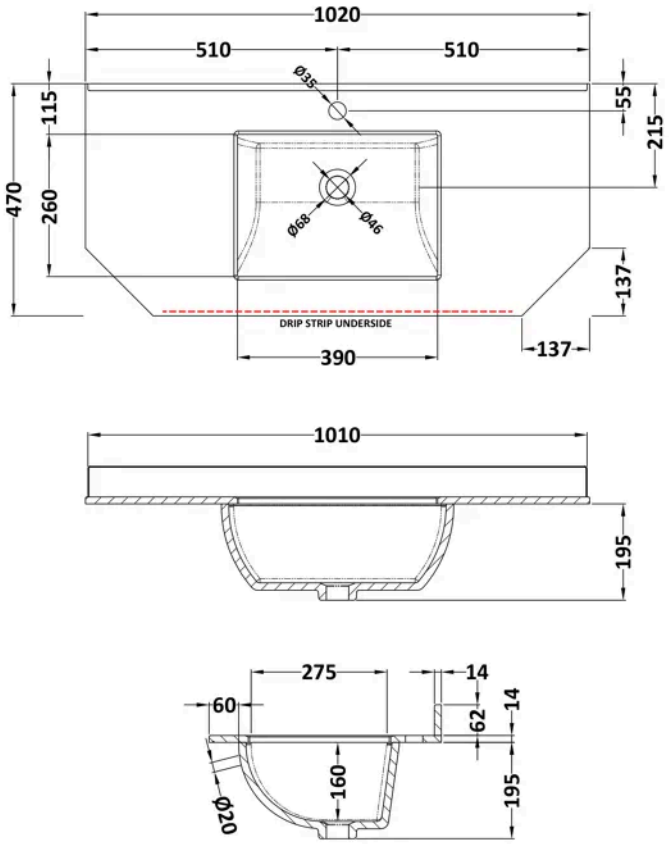

Product Dimensions

Product	268 x 1020 x 470mm (H x W x D)
Packaged	250 x 1100 x 580mm (H x W x D)
Nett Weight	19.5 kg
Packaged Weight	20 kg

Packaging Details

Box Qty	1

Product Details

Country of Origin	China
Product Material	Vitreous China
Colour/Finish	White

© ROXOR Group