Sales Code: BAYC226 **Barcode:** 5055275892589 **Brand:** Bayswater **Description:** Bayswater 3 Tap Hole 600mm Single Bowl Grey Marble Top Basin



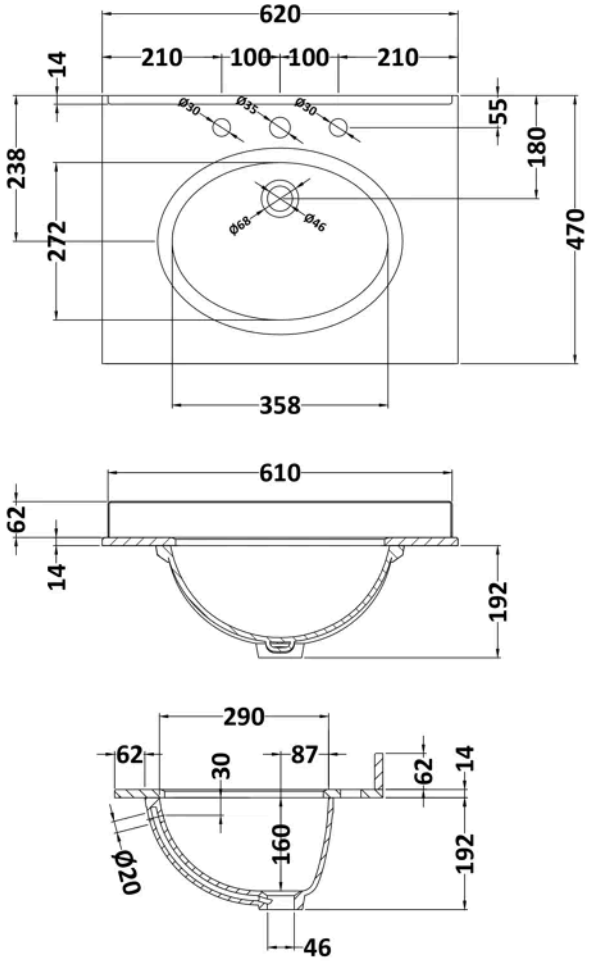

Product Dimensions

Product	268 x 620 x 463mm (H x W x D)
Packaged	310 x 700 x 550mm (H x W x D)
Nett Weight	13.5 kg
Packaged Weight	14 kg

Packaging Details

Box Qty	1

Product Details

Country of Origin	China
Product Material	Vitreous China
Colour/Finish	Grey
Inner Bowl Height	160 mm
No. Of Tapholes	3
Number Of Bowls	1

© ROXOR Group